HEAT EXCHANGER OPERATING MANUAL

Open System Models
WO2-2-7500-2P-NF-L-M-R407C
WO2-2-5000-2P-NF-L-M-R407C
REVISION 9

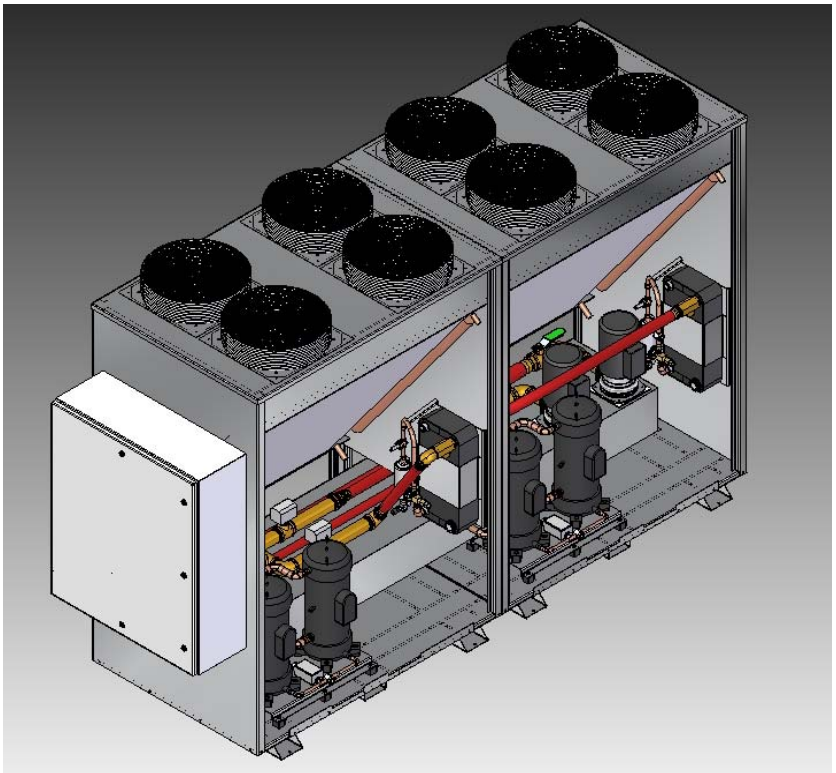

REVISION HISTORY

LEVEL	DATE	REVISION DESCRIPTION	SIGNATURES
3	25 March 2010	Initial Release	
4	02 April 2010	Corrections: a) Piping loss for fittings wording (A.II,S.5 now S.6) b) Correction to fluid connection tag, supply not return (A.IV) c) Change to wording, to Heat Exchanger (A.IX) d) Add misuse paragraph (A.II, S.2) e) Add drawing to detail weight distribution	
5	16 April 2010	Corrections: a) Corrected disconnect and pwr dist torques (6.06)	
6	25 October 2010	Corrections: a) Update electrical prints - data tag b) Corrected Connection type on page 19	
7	13 May 2011	Corrections: a) Changed internal plumbing to 1 ½ " b) Update Product Configuration Chart c) Update Photos Pg. 13-15	
8	12 July 2011	Corrections: a) Add new size to the Product Configuration Chart	
9	2 December 2014	Corrections: a) Added Nominal Chiller Capacity	12-3-14 12-3-14

PRODUCT CONFIGURATIONS

Configuration	GE PN	Supplier PN	07#	Revision	Supplier Model #	Size
Standard System	E8911CA	WO2-2-7500-15002990-GE	0717015002987	001	WO2-2-7500-2P-NF-L-M-R407C	750W/750/450 (30 Ton)
Standard + Coastal	E8911CB	WO2-2-7500-SS-15002990-GE	0717015002986	001	WO2-2-7500-2P-NF-L-M-R407C	750W/750/450 (30 Ton)
Extreme Cold	E8911CC	WO2-2-7500-40-15002990-GE	0717015002985	001	WO2-2-7500-2P-NF-L-M-407C	750W/750/450 (30 Ton)
Extreme Cold + Coastal	E8911CD	WO2-2-7500-SS-40-15002990-GE	0717015002984	001	WO2-2-7500-2P-NF-L-M-407C	750W/750/450 (30 Ton)
Standard System	E8912CA	WO2-2-5000-10002995-GE	0717010002992	001	WO2-2-5000-2P-NF-L-M-407C	450w (20 Ton)
Standard + Coastal	E8912CB	WO2-2-5000-SS-10002995-GE	0717010002991	001	WO2-2-5000-2P-NF-L-M-407C	450w (20 Ton)
Extreme Cold	E8912CC	WO2-2-5000-40-10002995-GE	0717010002990	001	WO2-2-5000-2P-NF-L-M-407C	450w (20 Ton)
Extreme Cold + Coastal	E8912CD	WO2-2-5000-SS-40-10002995-GE	0717010002989	001	WO2-2-5000-2P-NF-L-M-407C	450w (20 Ton)

Table of Contents

Article I. FOR YOUR SAFETY 5

Article II. INSTALLATION AND START-UP 6

Article III. CONTROLLER OPERATION 9

Section 3.01 Introduction: 9

Section 3.02 Initialization of Controller: 10

Section 3.03 Starting the System: 10

Section 3.04 Enabling Devices: 10

Section 3.05 Changing the Setpoint: 11

Section 3.06 Viewing Alarms: 11

Section 3.07 Sequence of Operation: 11

Article IV. HEAT EXCHANGER COMPONENTS 12

Article V. WATER TREATMENT 16

Article VI. MAINTENANCE 17

Section 6.01 Condenser: Cleaning Air Filters and Condenser 17

Section 6.02 Electric Motors 17

Section 6.03 Check Water Quality / Test Glycol Mixture 17

Section 6.04 Inspect and Clean Fluid Strainer 17

Section 6.05 Inspect Fluid System for Leaks Or Loose Connection 18

Section 6.06 Check All Wiring For Loose Connections, Chaffing Or Damage 18

Section 6.07 Inspect And Test Refrigeration System For Leaks 18

Article VII. HEAT EXCHANGER SPECIFICATIONS 19

Article VIII. TROUBLESHOOTING SERVICE GUIDE 20

Article IX. SPARE PARTS GUIDE 21

Article X. MSDS 22

Article XI. COMPONENT INFORMATION 32

Article XII. DRAWINGS 68

Article I. FOR YOUR SAFETY

1. Signs and Symbols:

Throughout the operating manual, the information and notices below are identified by graphical symbols.

DANGER!
Safety note indicating imminent danger. Failure to heed the warning may result in serious bodily injury and even death.

CAUTION!
Safety note indicating the presence of potential hazard. Failure to heed the safety notice may result in minor bodily injury or damage to the equipment.

INFORMATION!
This symbol identifies important information or a useful tip concerning the application or service of the unit.

2. Safety Notes:

For the installation and operation of the heat exchanger, the following regulations and safety notes have to be observed.

Any work on the heat exchanger may only be performed by qualified personnel. All relevant accident prevention regulations have to be observed.

The eletro-technical connection of the heat exchanger must be performed according to all relevant national and local standards.

Before attempting to carry out any work on the heat exchanger, always disconnect the unit from the power supply.

Any national regulations applicable in the country of installation must be observed.

The fluid must comply with KOOLANT KOOLERS specifications. Watch for an incompatibilities of materials in the entire fluid circuit.

3. Handling of refrigerants:

When handing refrigerants it is imperative that the relevant statutory regulations and guidelines be complied with. Only adequately skilled personnel may carry out this kind of work.

The proper disposal of refrigerants and parts of the system that are no longer serviceable lies within the responsibility of the operator of the facility.

Article II. INSTALLATION AND START-UP

1) **Outdoor Use:** The Heat Exchanger is designed to be installed outdoors, but is suitable for installation indoors provided the space can dissipate the heat rejected from the Heat Exchanger.

2) **Misuse:** The Heat Exchanger has potential for misuse that could result in unplanned downtime. The main disconnect, drain and possibly field installed service valves can be operated by unauthorized personnel. If unauthorized is a concern then a security fence should be provided to reduce the potential for misuse. Fencing must not obstruct airflow and must leave room or be removable for service.

3) **Leveling the Unit:** Make sure unit is placed, on a flat, level, hard surface. Heat Exchanger must be level or less than ½ inch of slope per 10 feet with the electrical box end of the Heat Exchanger at the high point. Use shims to correct level if needed. If a concrete slab is utilized, a 4 inch depth is adequate; pad should be at least 5 feet x 12 feet. If mounted on roof, two i-beams runners are typically provided to support feet at both ends. Heat Exchanger should be anchored from the feet mounting holes at the four corners of the machine. When mounted above office space, optional vibration mounting springs can be used to mount the Heat Exchanger, a spring mount will be provided for both ends of each foot.

4) **Proper Spacing:** The unit should be located where adequate air circulation is provided with room for servicing. As a general guideline for units with vertical air discharge (fans located on top), keep the unit at least *5 feet away from walls* and allow at least an *8 foot clearance above* the unit.[1] For units with horizontal air discharge (fans located on side), keep the side containing the fans a minimum of *15 feet from the wall*. The side containing the *filter should be a minimum of 6 feet from the wall*. Avoid placing the Heat Exchanger under or near eves which may reflect the discharge air back into the air inlet[2]. Do not place in a poorly ventilated room. The build-up of high ambient temperatures can cause compressor and or machine damage[3]

CAUTION: Heat Exchanger must not be installed more than 65 feet above the heat exchangers and cryro compressor. The Heat Exchanger pumps can deliver up to 165 feet of head and the heat exchangers and cryro compressor are rated at 230 feet of head max. If the Heat Exchanger is mounted more than 65 feet above the heat exchangers and cryro compressor, the maximum allowable pressure on the heat exchangers and cryro compressor may be exceeded. Consult factory for installations requiring the Heat Exchanger to be installed more than 65 feet above the Heat Exchanger.

5) **Connection of Water Piping:** The material and nominal widths of the pipes must be selected according to KOOLANT KOOLERS specifications. See dimensions in Article VII. Connect the fluid lines to the proper piping marked "*FLUID INLET TO HEAT EXCHANGER*" and "*FLUID OUTLET FROM HEAT EXCHANGER*". Make sure that the flow of fluid to and from the unit can not be shut off or blocked while the Heat Exchanger is in operation, and the pipe size matches specifications.

[1] Do not place in a mezzanine, near a ceiling or in an enclosed room without consulting factory.
[2] Note: Placing Heat Exchanger under or near eves that can result in ice damage or damage to the eve as a result of hot air discharge.
[3] If there is a concern about adequate ventilation for the Heat Exchanger please consult the factory.

6) **Length and Distance of Flow:** The maximum equivalent linear feet of total piping which may be installed external to the Heat Exchanger is 500ft. using 2" plumbing.[4] This is total piping which includes the feed and return to the heat exchangers and cryro compressor. The Heat Exchanger can pump fluid vertically up to 75 feet (usually 6 stories).

Standard Fitting Losses in Equivalent Feet of Pipe

2inch 90º Standard Elbow:	05.0ft. loss
2inch 90º Street Elbow:	08.2ft. loss
2inch 45º Standard Elbow:	02.6ft. loss
2inch 45º Street Elbow:	04.5ft. loss
2inch Globe Valve:	55.0ft. loss
2inch Gate Valve:	02.3ft. loss
2inch Angle Valve:	24.0ft. loss

7) **Voltage and Power:** Check building power to ensure it matches the Heat Exchanger rated voltage and current. Voltage and circuit ampacity of the unit can be found on the data tag which is located on the front of the electrical panel or the electrical drawings. Connect power leads to main disconnect[5].

8) **Remote Display:** If a remote display (Figure 1) is provided with the unit, install the provided 150 foot communications cable between the Heat Exchanger electrical panel and the remote display location. For distances in excess of 150 feet, an optional Long Distance Remote Display kit is required[6]. See *Initialization of Controller:* section for remote display plug connection point on master controller.

Figure 1
Remote display and communication cable

CAUTION: Heat Exchangers installed with a crankcase heater require the electrical panel disconnect to be in the "ON" position for a minimum of 8 hours before start-up of unit. Leaving the Disconnect in the "ON" position maintains power to the compressor crankcase heater, preventing refrigerant migration and possible damage to system. Power can be off for 30 minutes for service without observing the 8 hour pre-heat requirement.

9) Units are shipped with refrigeration service valves in the open (back-seated) position and do not require any adjustments. Service valves should only be adjusted by a certified technician.

[4] **NOTE:** If the equivalent piping exceeds 500' please contact the factory for assistance. 1-800-968-5665
[5] Wiring should match Heat Exchanger disconnect size and power requirements in accordance with local codes.
[6] Contact the parts department if the distance to remote location exceeds 150ft.

10) **Fill Unit:** Fill the reservoir through the fill/sight glass. You will know it is properly filled when water level remains between the two black level markers located on the sight glass.

CAUTION: Do not allow the fluid pumps to run dry. This will damage the pump seals and will not be covered under warranty.

11) **Turn On Unit:** Once Heat Exchanger reservoir has been filled, proceed to turn the main power disconnect on located on the electrical box door. Defeat the disconnect handle to open the electrical box door. Phase monitor light must be green and master controller alarms should be clear. Turn the system on. See the **CONTROLLER OPERATION** for more information on operation of the master controller.

Caution: Electrical Shock Hazard – Use appropriate personal protective equipment rated for exposure to 460 volts when within 3 feet of open electrical enclosure.

12) If pump motors do not start, check incoming power for correct sequence. If incoming power is present, check any faults on the master controller. Reset any faults which may be present.

13) Proceed to run Heat Exchanger pump for five minutes or more to allow any air in the system to be vented. Check fluid level after air is purged from the piping. Fill reservoir as needed.

14) Check controller for fault messages. Clear faults that may have occurred during start-up procedure. If faults do not re-occur, the system is ready for continuous duty.

Article III. CONTROLLER OPERATION

Section 3.01 Introduction:

On the Heat Exchanger unit there are multiple controllers as shown in Figure 2. These controllers communicate to a remote display called a PGD display which is shown in Figure 3. The Heat Exchanger status, settings and alarms can all be viewed and reset through the PGD display.

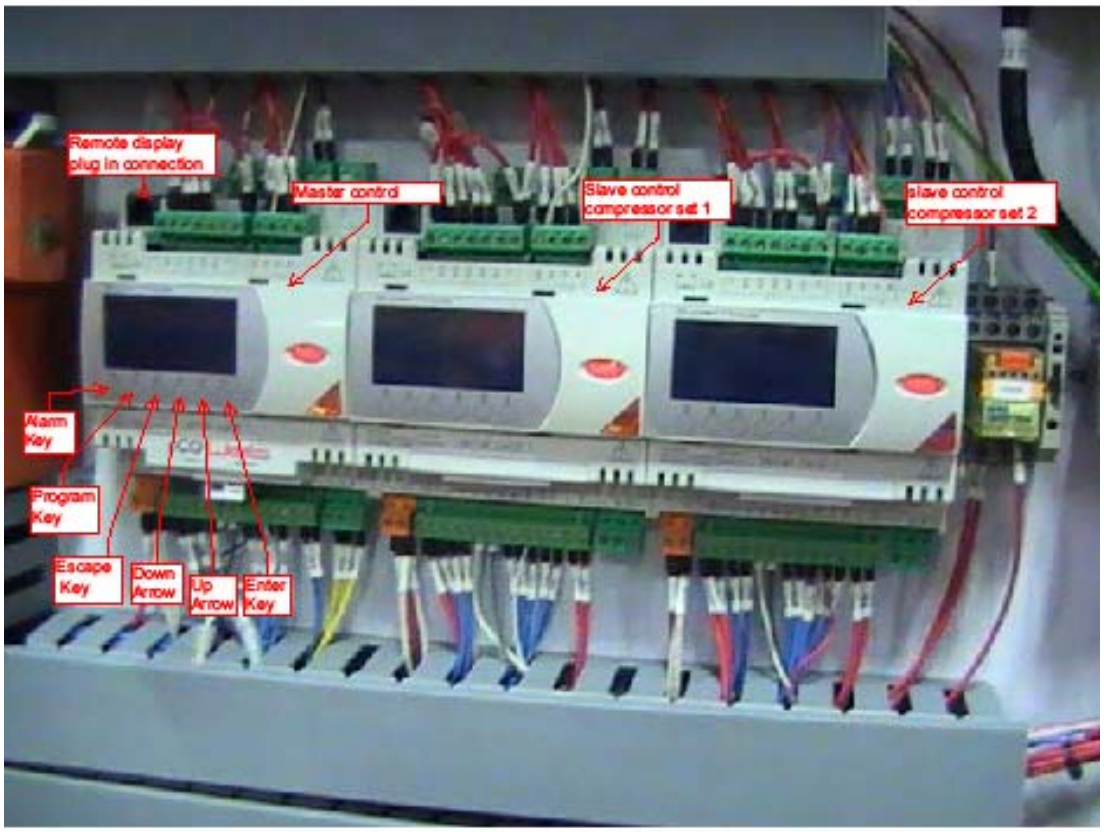

Figure 2

Figure 3

Section 3.02 Initialization of Controller:

When the unit is first powered up after a download it goes through a self-test and requires a reboot after initialization. Cycle power to the controller if the message in Figure 4 is displayed.

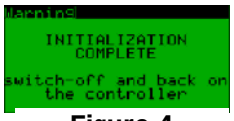

Figure 4

Figure 5

When the controller has finished its initial self test, the main page will be displayed. This displays the current time, date, unit #, fluid temperature, setpoint and system status. The page will look similar to Figure 5.

Section 3.03 Starting the System:

The system status displays the current status of the on/off switch.

Turn the system on: Press the "Prg" key and the main menu will be displayed over three screens. Highlight the menu labeled **"A. ON/OFF Unit"** and press the "Enter" key.

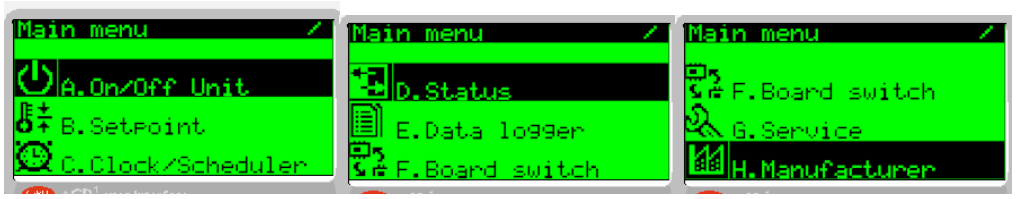

The next page will look similar to Figure 6. Press the "Enter" key again, to move the cursor over the "*SWITCH OFF*". Press the up arrow key to change the status to "*SWITCH ON*"

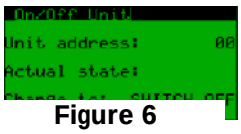

Figure 6

Section 3.04 Enabling Devices:

The pump and compressors can be individually enabled using the Enable/Disable function. To enable/disable devices press the "Prg" key to view the main menu. Highlight the menu labeled "G. SERVICE" and press the "Enter" key. Use the arrow keys to highlight the menu labeled "C. ENABLE/DISABLE" and press the "Enter" key again. The first page should display the Process Pumps similar to Figure 7. The three options for process pumps are:

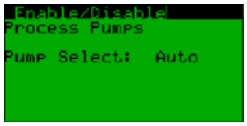

Figure 7

Auto = Selects pump based on time and switches on flow alarm (if enabled) & overload alarm
#1 = Selects only pump #1 to run
#2 = Selects only pump #2 to run

Once the Process Pumps have been selected, press the "↓" arrow key to change the page to Circuit #1. To enable the compressor(s), use the "Enter" key and the arrow keys to change the status from "No" to "Yes". Complete for any additional circuits on the unit. The number of compressors and circuits will depend on the design of the unit.

Section 3.05 Changing the Setpoint:

To turn the system on press the "Prg" key and the main menu will be displayed. Highlight the menu labeled "B. SETPOINT" and press the "Enter" key. The page will look similar to Figure 8. Press the "Enter" key again, to move the cursor over the fluid setpoint temperature. Use the arrow keys to change the temperature and press the "Enter" key to accept. Press the "Esc" key to return back to the main menu.

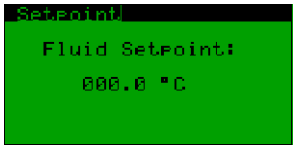

Figure 8

Section 3.06 **Viewing Alarms:**

When an alarm occurs the red alarm light on the PGD display will light up (a buzzer will activate if not disabled). To view this alarm, press the "Alarm" key and the alarms will be displayed. To view all active alarms, use the arrow keys to scroll up and down. To clear all inactive alarms, press and hold the "Alarm" key. At the end of the alarms a page similar to Figure 9 will be displayed. Press the "Enter" key and you will be taken to the Alarm Log page where you can view the alarm history.

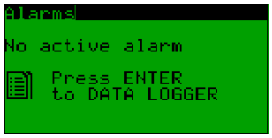

Figure 9

Section 3.07 Sequence of Operation:

Upon system start, with all compressors and pumps enabled a brief delay will occur and then the pump that didn't run during the last occurrence will start first. If flow is approved on either heat exchanger, the pump will continue to run. If no flow is established after a flow fault delay time, the opposing pump will automatically start. Pumps will rotate once every 24 hours to balance run time.

Once flow is established and cooling demand increases to 25%, the compressor that hasn't run in the longest period of time will start. As cooling demand increases to 50%, the compressor in the alternate compressor set that hasn't run in the longest period of time will start. At a cooling demand of 75% and 100% the remaining compressors will stage up. When cooling demand decreases by 25% from a compressor start percentage, a compressor will cycle off, compressors drop out in a 'first in-first out' sequence. The cooling demand signal is proportional and integral driven so the cycling of compressors should slowly correct to be centered about set point.

Article IV. HEAT EXCHANGER COMPONENTS

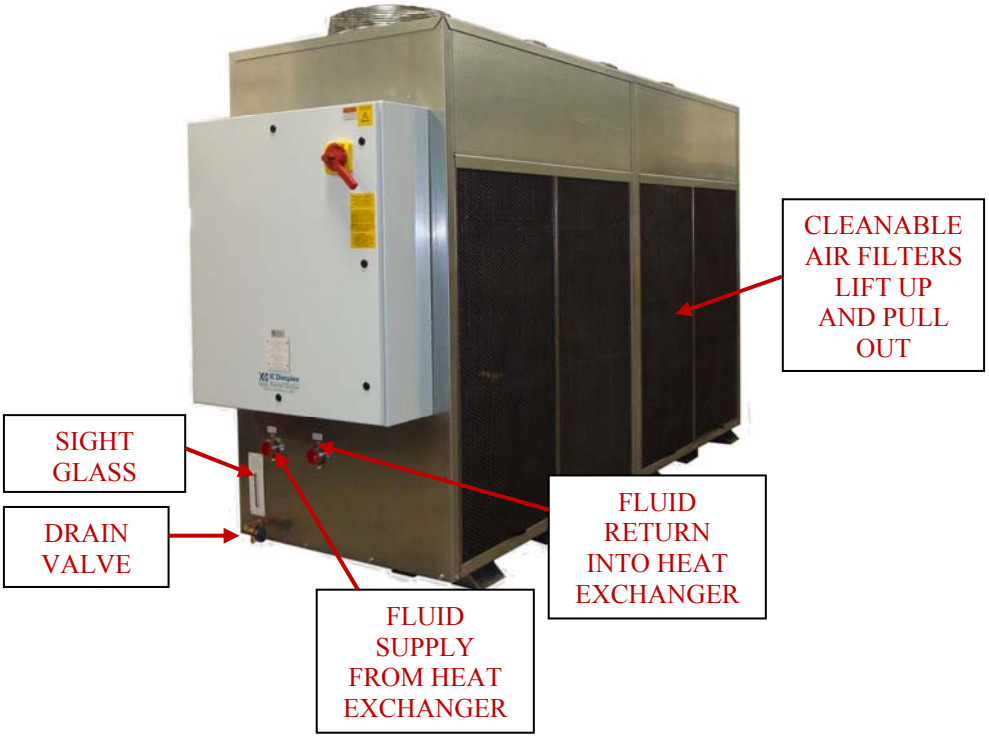

Heat Exchanger Main Parts

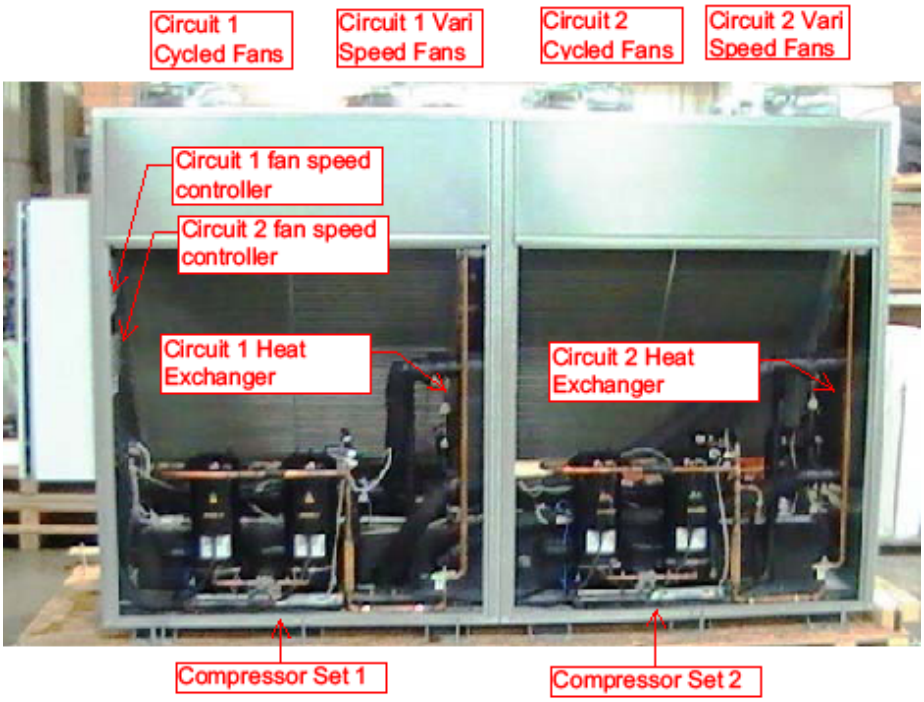

Heat Exchanger Overview 1

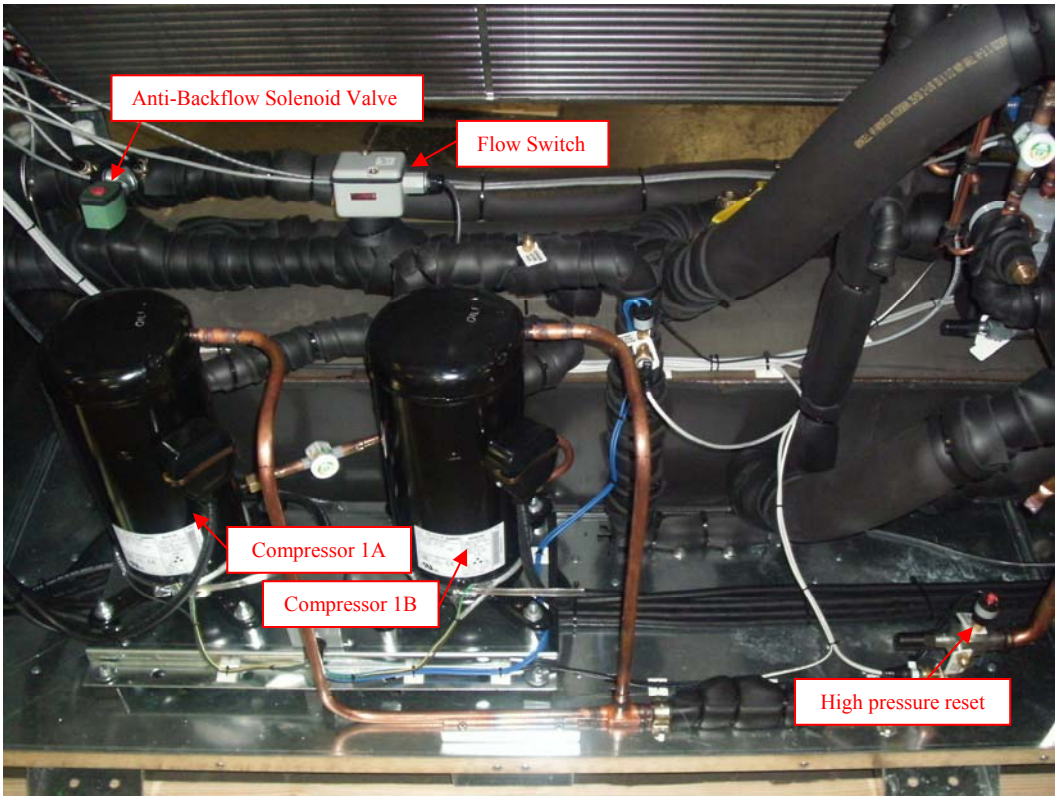
Anti-Backflow Solenoid Valve
Flow Switch
Compressor 1A
Compressor 1B
High pressure reset

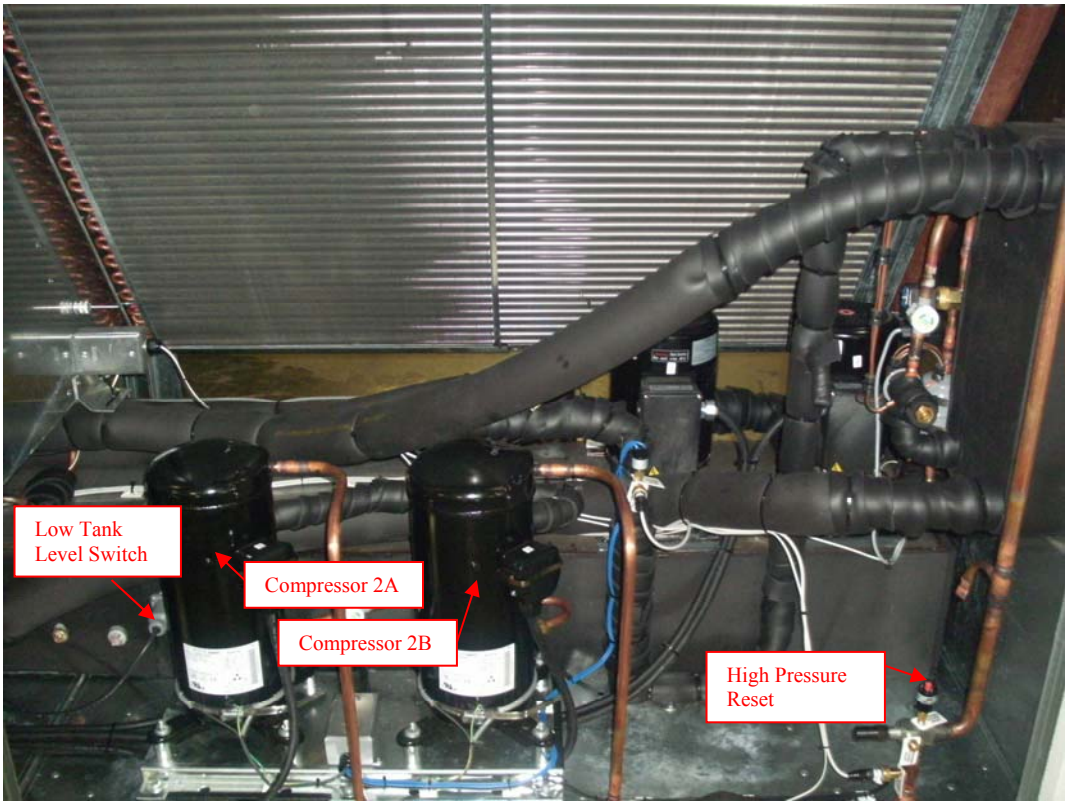
Low Tank
Level Switch
Compressor 2A
Compressor 2B
High Pressure
Reset

Bypass Relief Valve
Pump 1
Pump 2

Pumps 1

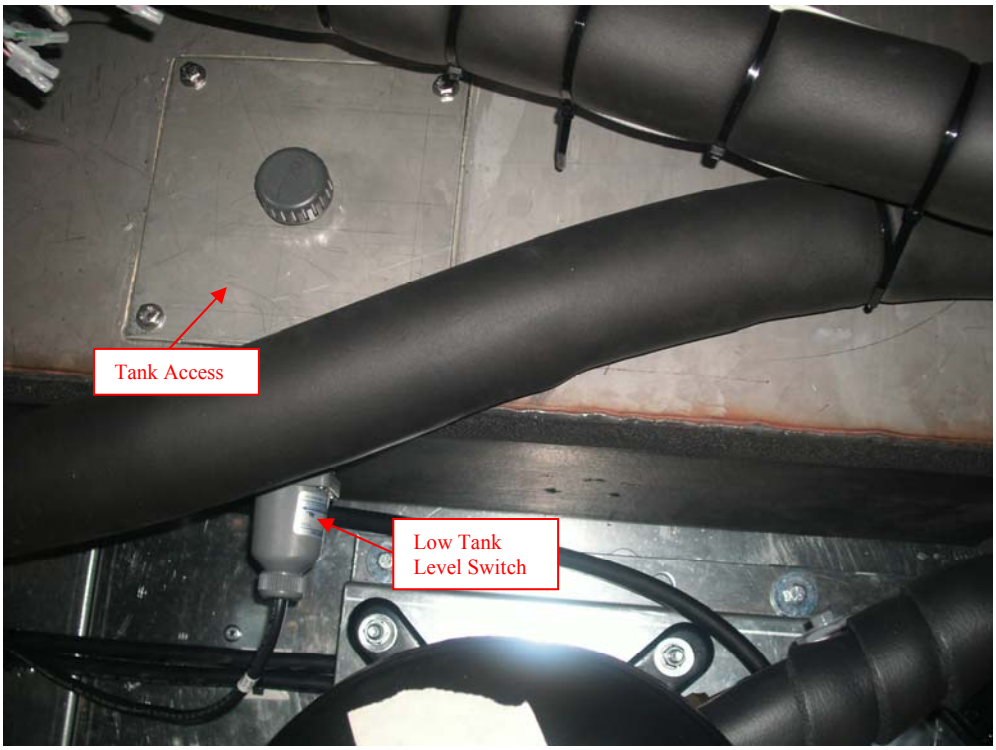
Tank Access
Low Tank Level Switch

Electrical Panel 1

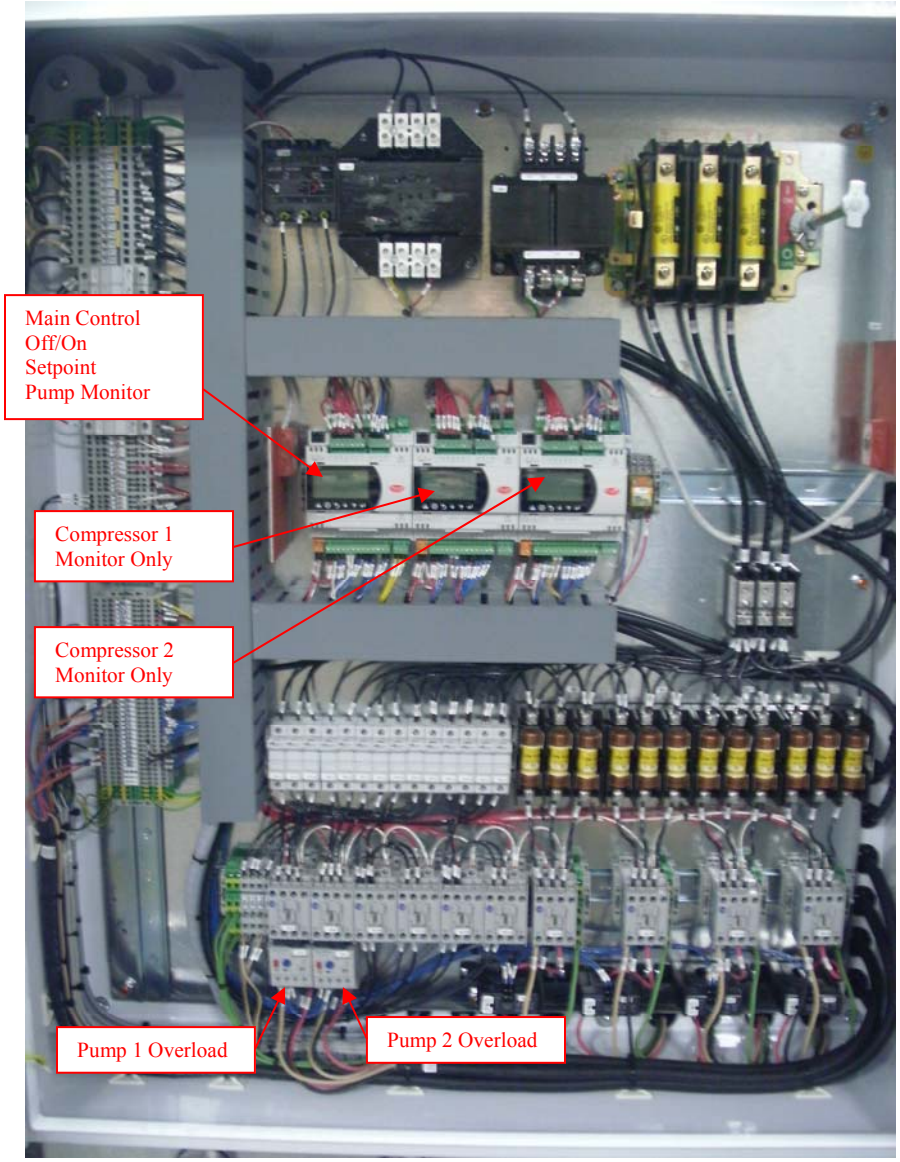

Article V. WATER TREATMENT

Dimplex Thermal Solutions recommends that an inhibited ethylene glycol or inhibited propylene glycol solution be used in its Heat Exchangers. Inhibited glycol solutions will prevent rust in ferrous material systems and it will keep algae and bacteria from growing inside the system. **Use 40-50% glycol for freeze protection.** If low toxicity glycol is desired or required, use an inhibited propylene glycol[7].

CAUTION: Do not mix brand names or types of glycol as this may result in the inhibitors precipitating out of solution. Do not use automotive antifreeze in the Heat Exchanger unit as it can cause extensive damage to the cooling system. The use of automotive anti-freeze can affect the heat transfer of the system, fluid flow, and attack the pump seals.

CAUTION: Galvanized piping is not recommended because the zinc will react with the inhibitor in the fluids, causing precipitate formation, depletion of the inhibitor package, and removal of the protective zinc coating, particularly above 100°F. Precipitation can also lead to localized corrosion.

Dimplex Thermal Solutions offers its own brands of inhibited ethylene glycol called "K-Kool E" and inhibited propylene glycol "K-Kool P" as a service to its customers. Call 1-800-968-5665 (1-800-YOU-KOOL) and ask for the parts department for more information.

If you have any other questions regarding the use of glycol or other water treatment issues for your Dimplex Thermal Solutions Heat Exchanger, please contact the factory at 1-800-968-5665 and ask for the service department.

[7] **Always refer to the original equipment manufacturers water quality treatment requirements to which the Heat Exchanger is connected before treating water.**

Article VI. MAINTENANCE

The following maintenance procedures should be completed every 4 – 6 months:

Section 6.01 Condenser: Cleaning Air Filters and Condenser

In order for the refrigeration system to perform to its rated capacity, it is very important to keep the condensing temperature from getting too hot. This usually happens when the condenser is not kept properly cleaned. The air cooled condensers are supplied with cleanable aluminum air filters, and it is very important that they be cleaned as necessary to maintain good airflow. Failing to do so will result in poor unit performance and possible compressor damage.

To clean the filters use a brush, compressed air or wash out with water. To clean the condenser coil using compressed air, pressure must not exceed 30 psi. Blow air in the opposite direction of the air flow when Heat Exchanger is in operation.

Section 6.02 Electric Motors

Maintenance for electric motors is required only when these motors are furnished with grease fittings so they can be greased. If this is the situation, we recommend greasing every 6 months.

Section 6.03 Check Water Quality / Test Glycol Mixture

System fluid should be clean and free of contaminants. Check the inlet and outlet pressure on the unit for normal pressures. These can be found under the "*HEAT EXCHANGER SPECIFICATIONS*" section. Test the glycol concentration level to ensure levels are within the rated conditions. Refill tank as needed with pre-mixed glycol to maintain proper concentration.

Section 6.04 Inspect and Clean Fluid Strainer

Fluid Strainers protect the brazed plate heat exchangers from becoming clogged. Inspect and clean strainers after first hour of operation, after first week of operation, and annually thereafter.

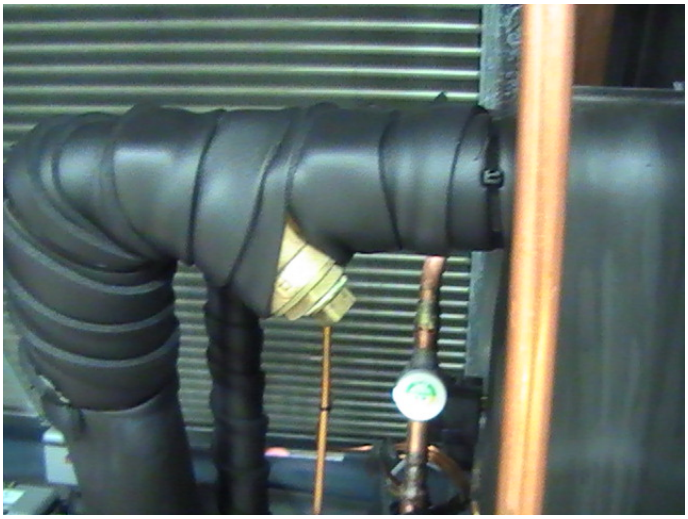

Section 6.05 Inspect Fluid System for Leaks or Loose Connection

Visually check fluid connections for any potential leaks in the system. Ensure there are no plumbing parts that show any significant wear including chaffing or cracking.

Section 6.06 Check All Wiring for Loose Connections, Chaffing or Damage

Turn off the main disconnect. Check all wiring inside of electrical panel and inside the Heat Exchanger unit for loose or damaged wires. Tighten any loose terminals and replace any damaged wires.

	WO2-2-5000-2P-NF-L-M-R407C **460 volt**	***WO2-2-7500-2P-NF-L-M-R407C*** **460 volt**
Pump/fan contactor power term.	22 lb-in	22 lb-in
Pump contactor overload term.	12 lb -in	12 lb -in
Pump/fan contactor control term.	8.9 to 13 lb-in	8.9 to 13 lb-in
Pump overload power terminals	22 lb-in	22 lb-in
Pump overload control term.	5 lb-in	5 lb-in
Compressor contactor power	13.3 to 22 lb-in	13.3 to 22 lb -in
Compressor contactor control	8.9 to 13 lb-in	8.9 to 13 lb-in
Fused terminal	25 lb-in	25 lb-in
Disconnect wire terminal	35 lb-in	35 lb-in
Disconnect fuse screw	35 lb-in	35 lb-in
Disconnect shaft set screw	12 lb-in	12 lb-in
Fuse block terminal	35 lb-in	35 lb-in
Transformer Allen Bradley	10 lb-in	10 lb-in
Transformer Dongan	16-18 lb-in	16-18 lb-in
Power Dist. Block Primary	120 lb-in	120 lb-in
Power Dist. Block Secondary #8	25 lb-in	25 lb-in
Power Dist. Block Sec #10-#14	20 lb-in	20 lb-in
Control relay socket terminals	5-9 lb-in	5-9 lb-in
Controller plug screws- large	5 lb-in	5 lb-in
Controller plug screws- small	2 lb-in	2 lb-in

Section 6.07 Inspect and Test Refrigeration System for Leaks

Inspect the inside of the Heat Exchanger unit for any visual evidence of a refrigerant leak. Spots of oil on the inside of the unit or on the refrigeration lines may signify a potential leak. Have a certified refrigeration technician inspect the unit for proper operation.

Maintenance as you can see is minimal, but should you have a problem or situation not described above, please call our service department for assistance at (269) 349-6800.

Article VII. HEAT EXCHANGER SPECIFICATIONS

Model Number:	WO2-2-5000	WO2-2-7500
Nominal Chiller Capacity	20 Tons	30 Tons
Capacity @ Rated Conditions	14 Tons	20 Tons
@ 50ºF Fluid	167,300 BTU/hr	240,000 BTU/hr
@ 122ºF Ambient	49kW	70 KW
Dimensions		
Height:	85”	85”
Width:	44”	44”
Depth:	138”	138”
Mechanical		
Compressor:	5 hp x 4	7.5 hp x 4
Pump:	3 hp x 2	3 hp x 2
Fan:	½ hp x 4	½ hp x 8
Inlet:	2” NPTF	2” NPTF
Outlet:	2” NPTF	2” NPTF
Reservoir:	100 gallons	100 gallons
Weight:	3200 lbs – dry	3500 lbs – dry
	4000lbs - operation	4300 lbs – operation
Electrical		
Voltage:	460V(+/-10%)/3/60Hz (+/-2Hz)	460V (+/-10%)/3/60Hz (+/-2Hz)
Voltage Imbalance	+/- 2 % max	+/- 2 % max
Disconnect Fuse:	80A	100A
FLA:	67A	91A
Compressor FLA:	11.8A	17.3A
Compressor LRA:	68A	114A
Pump FLA:	6.3A	6.3A
Fan FLA:	1.2A	1.2A
Max. Overcurrent Protect.	80A	110A
Min. Circuit Ampacity	70A	95A
Listings	NRTL LISTED TO UL1995(Standard)	NRTL LISTED TO UL1995(Standard)

Nominal flow required is 35 gpm @ 70 psi pump outlet, flow setter valve on fluid outlet pipe will automatically drop pressure to reduce flow to 35 gpm. Bypass relief valve is adjusted to maintain 70 to 80 psi maximum pressure to prevent pump damage due to deadheading. Bypass relief valve should only be adjusted to a higher pressure if the MRI is located above the Heat Exchanger. Increase valve setting by the head above the Heat Exchanger.

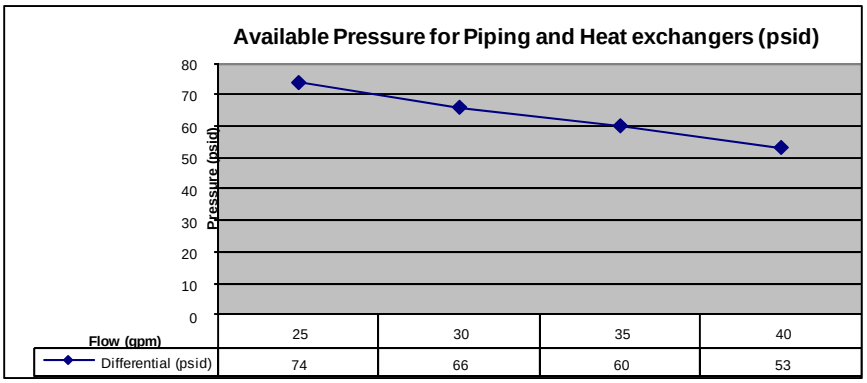

Article VIII. TROUBLESHOOTING SERVICE GUIDE

SYMPTOMS	POSSIBLE CAUSE
Selector switch is in "ON" position & pump will not start.	1. Open disconnect switch 2. Blown fuse 3. Tripped overloads 4. Phase monitor fault 5. Low tank level
Pump is rotating but no pressure is established.	1. Improper rotation 2. No water in reservoir 3. Valves not open 4. No back pressure 5. Pump suction blocked 6. Pump seal leaking
Pump runs properly, but compressor does not start.	1. Compressor is not getting energized-flow switch not activated
Compressor hums but will not start.	1. Low line voltage 2. Motor windings shorted to ground 3. Internal compressor damage 4. Improperly wired
Compressor will not start (no hum).	1. Open disconnect or blown fuse 2. Thermal overload open 3. Relay not closing to start compressor 4. Bad motor windings 5. Loss of refrigerant charge
Compressor starts but trips on internal protector	1. High suction or discharge pressure 2. Low line voltage 3. Bad motor windings
The unit short cycles.	1. Low refrigerant charge 2. Defective expansion valve
Temperature controller is indicating a fault:	See Below:
High refrigerant pressure fault	1. Dirty air filters 2. Refrigerant overcharge 3. Dirty condenser 4. Malfunction of fan motor 5. Excessive ambient air temperature
Low refrigerant pressure fault	1. Extreme low ambient temperature 2. Refrigerant leak 3. Lack of fluid flow through heat exchanger 4. Liquid line solenoid valve stuck or not opening 5. Expansion valve stuck or lost bulbwell charge.
Fluid flow fault	1. Pump not running 2. System not completely filled 3. Air in the system 4. Flow switch paddle stuck
Pump Overload fault	1. Overload setting incorrect 2. Bad motor windings 3. Low pump pressure due to low piping resistance
Phase Monitor fault	1. Incorrect line phasing 2. Low/High incoming voltage 3. Voltage imbalance between phases
Low Tank Level fault	1. Low/no fluid in Heat Exchanger reservoir 2. Float switch stuck in the open position

Article IX. SPARE PARTS GUIDE

Detailed below is the recommended spare parts list for your Koolant Koolers Heat Exchanger. For current pricing on the parts listed, please contact the Dimplex Thermal Solutions parts department at (800) 968-5665.

DTS Guarantee: If any part purchased from this list fails to function within one year of the purchase date, due to a failure in the part, Dimplex Thermal Solutions will replace the stock part for no charge.

Koolant Koolers Model #: WO2-2-5000

Part Description:	DTS PART #:	Qty:
***Air Filters**	**4300142**	**4**
***Expansion Valve**	**2760105**	**1**
***Fan Motor**	**4051311**	**1**
***Pump**	**1785007**	**1**
***Pump Seal Kit**	**1785052**	**1**
***Temperature Controller**	**4807776**	**1**
***Temperature Sensor**	**0611318**	**1**
Compressor	1450064	1
Crank Case Heater	1298032	1
Solenoid Valve	2710006	1
Solenoid Coil	0608319	1
Flow Switch	3653015	1
Pressure Transducer	4807736	1
Cord Set for Transducer	4807715	1
Pressure Transducer	4807739	1
Filter Dryer	2730006	1
Hi Pressure Switch	3640017	1
Lo Pressure Switch	3640006	1
ATJ80 Fuse	3500919	3
ATDR3 Fuse	3500970	3
TRM10 Fuse	3500091	2
TRM3 Fuse	3500030	1
ATDR1-1/2 Fuse	3500972	2
ATDR ½ Fuse	3500973	4
ATDR15 Fuse	3500960	10
AJT20 Fuse	3500910	12
***Core Components**		

Koolant Koolers Model #: WO2-2-7500

Part Description:	DTS PART #:	Qty:
***Air Filters**	**4300142**	**4**
***Expansion Valve**	**2760112**	**1**
***Fan Motor**	**4051311**	**1**
***Pump**	**1785007**	**1**
***Pump Seal Kit**	**1785052**	**1**
***Temperature Controller**	**4807776**	**1**
***Temperature Sensor**	**0611318**	**1**
Compressor	1450077	1
Crank Case Heater	1298032	1
Solenoid Valve	2710008	1
Solenoid Coil	0608319	1
Flow Switch	3653015	1
Pressure Transducer	4807736	1
Cord Set for Transducer	4807715	1
Pressure Transducer	4807739	1
Filter Dryer	2730005	1
Hi Pressure Switch	3640017	1
Lo Pressure Switch	3640006	1
ATJ100	3500921	3
ATDR3 Fuse	3500970	3
TRM10 Fuse	3500091	2
TRM3 Fuse	3500030	1
ATDR1-1/2 Fuse	3500972	2
ATDR ½ Fuse	3500973	4
ATDR15 Fuse	3500960	10
AJT25 Fuse	3500911	12
***Core Components**		

MSDS
&
COMPONENT INFORMATION

The MSDS format adheres to the standards and regulatory requirements of the United States and may not meet regulatory requirements in other countries.

"SUVA" 407C
6037FR Revised 29-AUG-2001

CHEMICAL PRODUCT/COMPANY IDENTIFICATION

Material Identification

"SUVA" is a registered trademark of DuPont.

Corporate MSDS Number : DU005999

Tradenames and Synonyms

"SUVA" 9000

Company Identification

MANUFACTURER/DISTRIBUTOR
DuPont Fluoroproducts
1007 Market Street
Wilmington, DE 19898

PHONE NUMBERS
Product Information : 1-800-441-7515 (outside the U.S. 302-774-1000)
Transport Emergency : CHEMTREC 1-800-424-9300(outside U.S. 703-527-3887)
Medical Emergency : 1-800-441-3637 (outside the U.S. 302-774-1000)

COMPOSITION/INFORMATION ON INGREDIENTS

Components

Material	CAS Number	%
PENTAFLUOROETHANE (HFC-125)	354-33-6	25
ETHANE, 1,1,1,2-TETRAFLUORO- (HFC-134a)	811-97-2	52
DIFLUOROMETHANE (HFC-32)	75-10-5	23

HAZARDS IDENTIFICATION

Potential Health Effects

Inhalation of high concentrations of vapor is harmful and may cause heart irregularities, unconsciousness, or death. Intentional misuse or deliberate inhalation may cause death without warning. Vapor reduces oxygen available for breathing and is heavier than air. Liquid contact can cause frostbite.

(HAZARDS IDENTIFICATION - Continued)

HUMAN HEALTH EFFECTS:

Overexposure to the vapors by inhalation may include temporary nervous system depression with anesthetic effects such as dizziness, headache, confusion, incoordination, and loss of consciousness. Higher exposures to the vapors may cause temporary alteration of the heart's electrical activity with irregular pulse, palpitations, or inadequate circulation. Gross overexposure may be fatal. Skin contact with the liquid may cause frostbite.

Individuals with preexisting diseases of the central nervous or cardiovascular system may have increased susceptibility to the toxicity of increased exposures.

Carcinogenicity Information

None of the components present in this material at concentrations equal to or greater than 0.1% are listed by IARC, NTP, OSHA or ACGIH as a carcinogen.

FIRST AID MEASURES

First Aid

INHALATION

If inhaled, immediately remove to fresh air. Keep person calm. If not breathing, give artificial respiration. If breathing is difficult, give oxygen. Call a physician.

SKIN CONTACT

Flush area with lukewarm water. Do not use hot water. If frostbite has occurred, call a physician.

EYE CONTACT

In case of contact, immediately flush eyes with plenty of water for at least 15 minutes. Call a physician.

INGESTION

Not a probable route. However, in case of accidental ingestion, call a physician.

Notes to Physicians

THIS MATERIAL MAY MAKE THE HEART MORE SUSCEPTIBLE TO ARRHYTHMIAS. Catecholamines such as adrenaline, and other compounds having similar effects, should be reserved for emergencies and then used only with special caution.

FIRE FIGHTING MEASURES

Flammable Properties

Flash Point : No flash point

Flammable Limits in Air, % by Volume:
LEL : None per ASTM E681
UEL : None per ASTM E681
Autoignition: Not determined

Fire and Explosion Hazards:

Cylinders may rupture under fire conditions. Decomposition may occur.

Contact of welding or soldering torch flame with high concentrations of refrigerant can result in visible changes in the size and color of torch flames. This flame effect will only occur in concentrations of product well above the recommended exposure limit, therefore stop all work and ventilate to disperse refrigerant vapors from the work area before using any open flames.

R-407C is not flammable in air at temperatures up to 100 deg C (212 deg F) at atmospheric pressure. However, mixtures of R-407C with high concentrations of air at elevated pressure and/or temperature can become combustible in the presence of an ignition source. R-407C can also become combustible in an oxygen enriched environment (oxygen concentrations greater than that in air). Whether a mixture containing R-407C and air, or R-407C in an oxygen enriched atmosphere becomes combustible depends on the inter-relationship of 1) the temperature 2) the pressure, and 3) the proportion of oxygen in the mixture. In general, R-407C should not be allowed to exist with air above atmospheric pressure or at high temperatures; or in an oxygen enriched environment. For example: R-407C should NOT be mixed with air under pressure for leak testing or other purposes.

Experimental data have also been reported which indicate combustibility of HFC-134a, a component in this blend, in the presence of chlorine.

Extinguishing Media

As appropriate for combustibles in area.

Fire Fighting Instructions

Cool cylinder with water spray or fog. Self-contained breathing apparatus (SCBA) is required if cylinders rupture and contents are released under fire conditions. Water runoff should be contained and neutralized prior to release.

ACCIDENTAL RELEASE MEASURES

Safeguards (Personnel)

NOTE: Review FIRE FIGHTING MEASURES and HANDLING (PERSONNEL) sections before proceeding with clean-up. Use appropriate PERSONAL PROTECTIVE EQUIPMENT during clean-up.

Accidental Release Measures

Ventilate area, especially low or enclosed places where heavy vapors might collect. Remove open flames. Use self-contained breathing apparatus (SCBA) for large spills or releases.

HANDLING AND STORAGE

Handling (Personnel)

Avoid breathing vapor. Avoid liquid contact with eyes and skin. Use with sufficient ventilation to keep employee exposure below recommended limits. Contact with chlorine or other strong oxidizing agents should also be avoided. See Fire and Explosion Data section.

Storage

Clean, dry area. Do not heat above 52 deg C (125 deg F).

EXPOSURE CONTROLS/PERSONAL PROTECTION

Engineering Controls

Avoid breathing vapors. Avoid contact with skin or eyes. Use with sufficient ventilation to keep employee exposure below the recommended exposure limit. Local exhaust should be used if large amounts are released. Mechanical ventilation should be used in low or enclosed places.

Personal Protective Equipment

Impervious gloves should be used to avoid prolonged or repeated exposure. Chemical splash goggles should be available for use as needed to prevent eye contact. Under normal manufacturing conditions, no respiratory protection is required when using this product. Self-contained breathing apparatus (SCBA) is required if a large release occurs.

Exposure Guidelines

Applicable Exposure Limits

PENTAFLUOROETHANE (HFC-125)

PEL	(OSHA)	: None Established
TLV	(ACGIH)	: None Established
AEL *	(DuPont)	: 1000 ppm, 8 & 12 Hr. TWA
WEEL	(AIHA)	: 1000 ppm, 4900 mg/m3, 8 Hr. TWA

ETHANE, 1,1,1,2-TETRAFLUORO- (HFC-134a)

PEL	(OSHA)	: None Established
TLV	(ACGIH)	: None Established
AEL *	(DuPont)	: 1000 ppm, 8 & 12 Hr. TWA
WEEL	(AIHA)	: 1000 ppm, 8 Hr. TWA

DIFLUOROMETHANE (HFC-32)

AEL *	(DuPont)	: 1000 ppm, 8 & 12 Hr. TWA
WEEL	(AIHA)	: 1000 ppm, 8 Hr. TWA

* AEL is DuPont's Acceptable Exposure Limit. Where governmentally imposed occupational exposure limits which are lower than the AEL are in effect, such limits shall take precedence.

PHYSICAL AND CHEMICAL PROPERTIES

Physical Data

Boiling Point	: -43.9 C (-47 F) Average
Vapor Pressure	: 171.8 psia 25 C (77 F)
% Volatiles	: 100 WT%
Evaporation Rate	: (Cl4 = 1) Greater than 1
Solubility in Water	: Not determined
Odor	: Slight ethereal
Form	: Liquefied gas
Color	: Clear, colorless
Specific Gravity	: 1.136 @ 25 C (77 F)

STABILITY AND REACTIVITY

Chemical Stability

Material is stable. However, avoid open flames and high temperatures.

Incompatibility with Other Materials

Incompatible with active metals, alkali or alkaline earth metals--powdered Al, Zn, Be, etc.

(STABILITY AND REACTIVITY - Continued)

Decomposition

Decomposition products are hazardous. "SUVA" 9000 can be decomposed by high temperatures (open flames, glowing metal surfaces, etc.) forming hydrochloric and hydrofluoric acids and possibly carbonyl halides. These materials are toxic and irritating. Contact should be avoided.

Polymerization

Polymerization will not occur.

TOXICOLOGICAL INFORMATION

Animal Data

The blend is untested.

HFC-125

Inhalation 4 hour ALC: > 709,000 ppm in rats

Single, high inhalation exposures caused lethargy, decreased activity, labored breathing and weight loss. Weak cardiac sensitization effect, a potentially fatal disturbance of heart rhythm caused by a heightened sensitivity to the action of epinephrine. Lowest-Observed-Adverse-Effect-Level for cardiac sensitization: 100,000 ppm.
Repeated exposure caused: No significant toxicological effects. No-Observed-Adverse-Effect-Level(NOAEL): 50,000 ppm

No animal data are available to define carcinogenic, developmental or reproductive hazards. In animal testing this material has not caused developmental toxicity. HFC-125 does not produce genetic damage in bacterial or mammalian cell cultures or when tested in animals (not tested for heritable genetic damage).

HFC-134a

Inhalation 4-hour LC50: 567,000 ppm in rats

Single exposure caused: Cardiac sensitization, a potentially fatal disturbance of heart rhythm associated with a heightened sensitivity to the action of epinephrine. Lowest-Observed-Adverse-Effect-Level for cardiac sensitization: 75,000 ppm. Single exposure caused: Lethargy. Narcosis. Increased respiratory rates. These effects were temporary. Single exposure to near lethal doses caused: Pulmonary edema. Repeated exposure caused: Increased adrenals, liver, spleen weight. Decreased uterine, prostate weight. Repeated dosing of higher concentrations caused: the following temporary effects - Tremors. Incoordination.

(TOXICOLOGICAL INFORMATION - Continued)

CARCINOGENIC, DEVELOPMENTAL, REPRODUCTIVE,MUTAGENIC EFFECTS:

In a two-year inhalation study, HFC-134a, at a concentration of 50,000 ppm, produced an increase in late-occurring benign testicular tumors, testicular hyperplasia and testicular weight. The no-effect-level for this study was 10,000 ppm. Animal data show slight fetotoxicity but only at exposure levels producing other toxic effects in the adult animal. Reproductive data on male mice show: No change in reproductive performance. Tests have shown that this material does not cause genetic damage in bacterial or mammalian cell cultures, or in animals. In animal testing, this material has not caused permanent genetic damage in reproductive cells of mammals (has not produced heritable genetic damage).

HFC-32

Inhalation: 4 hour-ALC: > 520,000 ppm in rats

Single exposure caused: Lethargy. Spasms. Loss of mobility in the hind limbs. Other effects include weak cardiac sensitization, a potentially fatal disturbance of heart rhythm caused by a heightened sensitivity to the action of epinephrine. 250,000 ppm.

Repeated exposure caused pathological changes of the lungs, liver, spleen, kidneys. In more recent studies repeated exposure caused: No significant toxicological effects. No-Observed-Effect-Level (NOEL): 49,100 ppm.

No animal data are available to define the following effects of this material: carcinogenicity, reproductive toxicity. Animal data show slight fetotoxicity but only at exposure levels producing other toxic effects in the adult animal. Tests have shown that this material does not cause genetic damage in bacterial or mammalian cell cultures, or in animals. This material has not been tested for its ability to cause permanent genetic damage in reproductive cells of mammals (not tested for heritable genetic damage).

ECOLOGICAL INFORMATION

Ecotoxicological Information

HFC-134a
48-hour EC50, Daphnia magna: 980 mg/L
96-hour LC50, Rainbow trout: 450 mg/L

DISPOSAL CONSIDERATIONS

Waste Disposal

Comply with Federal, State, and local regulations. Reclaim by distillation or remove to a permitted waste disposal facility.

TRANSPORTATION INFORMATION

Shipping Information

DOT/IMO/IATA

Proper Shipping Name	: Refrigerant Gas R407C
Hazard Class	: 2.2
UN No.	: 3340
Label(s)	: Nonflammable Gas

Shipping Containers

Tank Cars.

Cylinders
Ton Tanks

REGULATORY INFORMATION

U.S. Federal Regulations

TSCA Inventory Status : Reported/Included.

TITLE III HAZARD CLASSIFICATIONS SECTIONS 311, 312

Acute	: Yes
Chronic	: Yes
Fire	: No
Reactivity	: No
Pressure	: Yes

LISTS:

SARA Extremely Hazardous Substance	-No
CERCLA Hazardous Substance	-No
SARA Toxic Chemical	-No

OTHER INFORMATION

NFPA, NPCA-HMIS

NPCA-HMIS Rating

Health	: 1
Flammability	: 0
Reactivity	: 1

Personal Protection rating to be supplied by user depending on use conditions.

Additional Information

MEDICAL USE: CAUTION: Do not use in medical applications involving permanent implantation in the human body. For other medical applications see DuPont CAUTION Bulletin No. H-50102.

The data in this Material Safety Data Sheet relates only to the specific material designated herein and does not relate to use in combination with any other material or in any process.

Responsibility for MSDS	: MSDS Coordinator
>	: DuPont Fluoroproducts
Address	: Wilmington, DE 19898
Telephone	: (800) 441-7515

# Indicates updated section.

This information is based upon technical information believed to be reliable. It is subject to revision as additional knowledge and experience is gained.

End of MSDS

cod. +050001040 rel. 1.3 - 05.02.2004

PGD0000F00/PGD0000W00 pCO display grafico / *pCO Graphic Display*

CAREL

Terminale versione da incasso
Panel mounting terminal

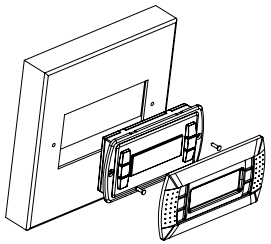

Fig. 1

Terminale versione montaggio a parete
Wall mounting terminal

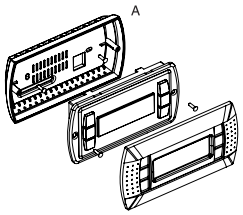

Fig. 2

Configurazione indirizzo / *Configuring the address*

```
Display address
setting.........:nn

I/O Board address:xx
```

Fig. 3

```
Display address
changed
```

Fig. 4

Assegnazione lista terminali privati e condivisi /
Assigning the list of private and shared terminals

```
Terminal Config

Press ENTER
to continue
```

⇓

```
P12: Adr  Priv/Shared
Trm1 02     Sh
Trm2 03     Ph
Trm3 None   --OK?NO
```

Fig. 5

I Vi ringraziamo per la scelta fatta, sicuri che sarete soddisfatti del vostro acquisto.

Il display grafico pGD è un dispositivo elettronico, compatibile con i precedenti terminali della linea PCOI/PCOT, che consente la completa gestione della grafica tramite la visualizzazione di icone (definite a livello di sviluppo software applicativo) e la gestione di font internazionali di due dimensioni: 5x7 e 11x15 pixel.
Il software applicativo è residente soltanto sulla scheda pCO, il terminale non ha bisogno di nessun software aggiuntivo in fase di utilizzo.
Inoltre il terminale offre un ampio range di temperatura di funzionamento (-20T60 °C) e nella versione ad incasso il frontale garantisce un elevato grado di protezione (IP65).

Codici dei modelli

Versione da incasso o pannello	PGD0000F00
Versione da parete	PGD0000W00

Montaggio a pannello (cod. PGD0000F00)

Questi terminali sono stati progettati per il montaggio a pannello; la dima di foratura deve avere dimensioni di 127x69 mm + 2 fori circolari diametro 4 come indicato in Fig. 8. Per l'installazione seguire le istruzioni riportate di seguito:
- Effettuare il collegamento del cavo telefonico;
- Inserire il terminale, privo di cornice frontale, nel foro, e mediante le viti a testa svasata, contenute all'interno dell'imballo, fissare il dispositivo al pannello nelle sedi indicate in Fig. 1;
- Infine, installare la cornice a scatto.

Montaggio a parete (cod. PGD0000W00)

Il montaggio a parete del terminale prevede l'iniziale fissaggio del retrocontenitore A (Fig. 2), per mezzo di una scatola standard a 3 moduli per interruttori.
- Fissare il retrocontenitore alla scatola tramite le viti a testa bombata presenti all'interno dell'imballo;
- Effettuare il collegamento del cavo telefonico;
- Appoggiare il frontale al retrocontenitore e fissare il tutto utilizzando le viti a testa svasata presenti all'interno dell'imballo come illustrato in Fig. 2;
- Infine, installare la cornice a scatto.

Collegamento elettrico

Collegare il cavo telefonico (cod. S90CONN00*) proveniente dalla scheda pCO all'apposito connettore (RJ12) posto sul retro del terminale.

Configurazione indirizzo

È possibile configurare l'indirizzo del terminale solo dopo aver fornito alimentazione allo stesso tramite il connettore telefonico RJ12 (il valore preimpostato in fabbrica è 32).
Per entrare in modalità configurazione premere contemporaneamente i tasti ↓ ↑ ↵ (sempre presenti in tutte le versioni) per almeno 5 secondi; verrà visualizzata la maschera di Fig. 3 con il cursore lampeggiante nell'angolo in alto a sinistra:
- Per modificare l'indirizzo del terminale (display address setting) premere una volta il tasto ↵: il cursore si sposterà sul campo indirizzo (nn).
- Tramite i tasti ↓↑ selezionare il valore voluto, e confermare ripremendo il tasto ↵. Se il valore selezionato è diverso da quello memorizzato precedentemente apparirà la maschera di Fig. 4 e il nuovo valore verrà memorizzato nella memoria permanente del display.

Se si imposta il campo nn al valore 0, il terminale comunicherà con la scheda pCO usando il protocollo "punto-punto" (non pLAN) e il campo "I/O Board address: xx" scompare in quanto privo di significato.

pCO: assegnazione lista terminali privati e condivisi

A questo punto, se fosse necessario modificare la lista dei terminali associata ad ogni singola scheda pCO, si dovrà seguire la seguente procedura:
- entrare nella modalità configurazione con i tasti ↓↑↵, come descritto nel paragrafo precedente;
- premere il tasto ↵ fino a che il cursore si posiziona sul campo xx (I/O board address) Fig. 3;
- tramite i tasti ↓↑ scegliere l'indirizzo della scheda pCO desiderata. I valori selezionabili saranno solo quelli delle schede pCO effettivamente in linea. Se la rete pLAN non funziona correttamente, oppure non è presente nessuna scheda piCO, non sarà possibile modificare il campo che mostrerà solo "—";
- premendo ancora una volta il tasto ↵ verranno visualizzate in sequenza le maschere di Fig. 5;
- anche qui il tasto ↵ muove il cursore da un campo all'altro e i tasti ↓↑ cambiano il valore del campo corrente. Il campo P:xx mostra l'indirizzo della scheda selezionata; nell'esempio di figura è stata selezionata la 12;
- per uscire dalla procedura di configurazione e memorizzare i dati selezionare il campo "OK ?" impostare Yes e confermare con il tasto ↵.

I campi della colonna "Adr" rappresentano gli indirizzi dei terminali associati alla scheda pCO di indirizzo 12, mentre la colonna Priv/Shared indica il tipo di terminale.
<u>Attenzione:</u> i terminali della linea pGD non possono essere configurati come "Sp" (shared printer) in quanto privi dell'uscita stampante.
Se il terminale rimane inattivo (nessun tasto premuto) per più di 30 secondi esce automaticamente dalla procedura di configurazione senza memorizzare gli eventuali cambiamenti.

Segnalazione guasti

Se il terminale rivela lo stato di fuori linea della scheda pCO a cui è stato associato cancella il display e visualizza il messaggio: **`I/O Board xx fault`**.
Mentre, se il terminale non riceve nessun segnale di rete, cancella il display e visualizza il seguente messaggio: **NO LINK**.

GB *Thank you for your choice. We trust you will be satisfied with your purchase.*

The pGD graphic display is an electronic device that is compatible with the previous PCOI/PCOT line terminals; it allows complete management of graphics by the display of icons (defined at an application software development level), as well as the management of international fonts, in two sizes: 5x7 and 11x15 pixels.
The application software resides on the pCO board, and therefore the terminal does not require any additional software for operation.
Furthermore, the terminals feature a wide operating temperature range (-20T60 °C) and in the built-in version, the front panel ensures a high index of protection (IP65).

Model codes

Built-in or panel-mounted version	*PGD0000F00*
Wall-mounted version	*PGD0000W00*

Panel-mounted version (code PGD0000F00)

These terminals have been designed for panel installation; the drilling template measures 127x69 mm and has 2 circular holes, 4 mm in diameter, as shown in Fig. 8. For installation, proceed as follows:
- *Connect the telephone cable;*
- *Insert the terminal, with the front frame removed, into the opening, and fasten the device to the panel using the flush-head screws, supplied in the packaging, as shown in Fig. 1;*
- *Finally, fit the click-on frame.*

Wall-mounted version (code PGD0000W00)

The wall-mounting of the terminal first requires the back piece of the container A (Fig. 2) to be fitted, using a standard three-module switch box.
- *Fasten the back piece to the box using the rounded-head screws supplied in the packaging;*
- *Connect the telephone cable;*
- *Rest the front panel on the back piece and fasten the parts together using the flush-head screws supplied in the packaging, as shown in Fig. 2;*
- *Finally, fit the click-on frame.*

Electrical connection

Connect the telephone cable (code S90CONN00) from the pCO board to the connector provided (RJ12) on the rear of the terminal.*

Configuring the address

The address of the terminal can be configured only after having connected the power supply, using the RJ12 telephone jack (the factory default value is 32).
To access configuration mode, press the ↓ ↑ ↵ buttons (present on all versions) together and hold them for at least 5 seconds; the screen shown in Fig. 3 will be displayed, with the cursor flashing in the top left corner:
- *To change the address of the terminal (display address setting), press the ↵ button once: the cursor will move to the address field (nn).*
- *Use the ↓↑ buttons to select the desired value, and confirm by pressing ↵ again. If the value selected is not the same as the one saved previously, the screen shown in Fig. 4 will be displayed, and the new value will be saved to the permanent memory.*

If the field nn is set to 0, the terminal will communicate with the pCO board using "point-to-point" protocol (not pLAN) and the field "I/O Board address: xx" will not be displayed, as it has no meaning.

pCO: assigning the list of private and shared terminals

At this point, if the list of terminals associated with each individual pCO board needs to be modified, proceed as follows:
- *access configuration mode using the ↓↑↵ buttons, as described in the previous paragraph;*
- *press the ↵ button until the cursor moves to the field xx (I/O board address) Fig. 3;*
- *use the ↓↑ buttons to select the pCO board in question. The values available correspond to the pCO boards that are effectively on line. If the pLAN network is not working correctly, or if no pCO board is present, the field cannot be modified, and the symbol "—" will be displayed;*
- *pressing ↵ again displays the screens shown in Fig. 5, in sequence;*
- *here too, the ↵ button moves the cursor from one field to the next, and the ↓↑ buttons change the value of the current field. The field P:xx shows the address of the board selected; in the example shown in the figure, the value 12 has been selected;*
- *to exit the configuration procedure and save the data, select the field "OK ?", choose Yes and confirm by pressing ↵.*

The fields in the "Adr" column represent the addresses of the terminals associated with the pCO board that has address 12, while the Priv/Shared column indicates the type of terminal.
<u>Note:</u> the pGD terminals cannot be configured as "Sp" (shared printer), as they have no printer port.
If the terminal remains inactive (no button is pressed) for more than 30 seconds, the configuration procedure is exited automatically, without saving any changes.

Fault signals

If the terminal detects the off-line status of the pCO board it is associated with, the display shows the message: **`I/O Board xx fault`**.
On the other hand, if the terminal receives no signal from the network, the display shows the following message: ***NO LINK***.

Assegnazione lista terminali privati e condivisi
Assigning the list of private and shared terminals

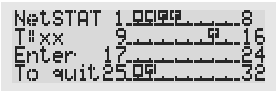

Fig. 6

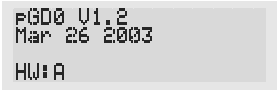

Fig. 7

Dimensioni / *Dimensions*

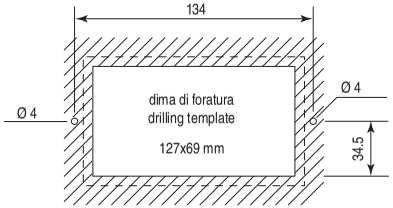

Fig. 8

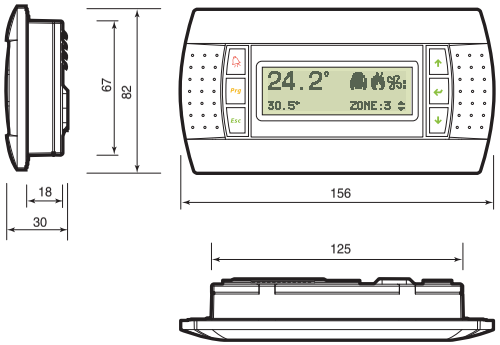

Fig. 9

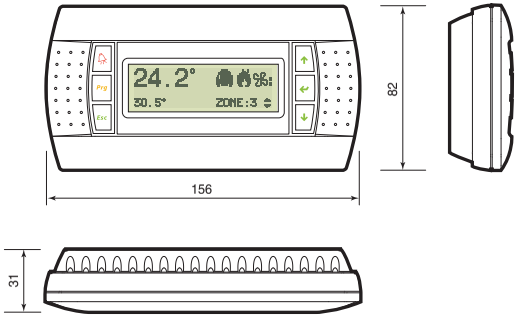

Fig. 10

Visualizzazione stato rete e versione del firmware

Premendo contemporaneamente i tasti di configurazione (↓ ↑ ↵) per almeno 10 secondi (solo in modalità pLAN), si visualizza la maschera di Fig. 6.

La schermata in Fig. 6 esemplifica lo stato della rete pLAN, visualizzando quanti e quali dispositivi sono collegati, e con quale indirizzo.
Legenda:

: controllore pCO attivo in rete

: terminale attivo in rete

: nessun dispositivo collegato

Es. la Fig. 4 rappresenta:
controllori pCO attivi in rete con indirizzo: 1, 2, 25
terminali attivi in rete con indirizzo: 3, 4, 15, 26.

Tramite i tasti ↓ ↑ è possibile visualizzare la versione del firmware residente nel terminale (Fig. 7).

Per uscire dalla procedura NetSTAT premere il tasto ↵.

Regolazione contrasto LCD

I tasti + ***Prg*** + ↓ ↑ consentono la regolazione del contrasto.

Caratteristiche tecniche

Display	
Tipo:	grafico FSTN
Retroilluminazione:	LED verdi (comandabile da "software applicativo")
Risoluzione in grafica:	120x32 pixel
Modi testo:	4 righe x 20 colonne (font 5x7 e 11x15 pixel) 2 righe x 10 colonne (font 11x15 pixel) oppure modi misti
Altezza carattere:	4,5 mm (font 5x7 pixel) 9 mm (font 11x15 pixel)
Dimensione area attiva:	71.95x20.75 mm
Dimensione area visiva:	76x25.2 mm
LED tastiera	
2 programmabili da "software applicativo" di colore rosso e arancio (tasti Prg e Alarm)	
4 di colore verde, asserviti al comando backlight dell'LCD (tasti ↓ ↑ ↵ e Esc)	
Alimentazione	
Tensione:	alimentazione da pCO tramite connettore telefonico oppure da sorgente esterna 18/30 Vdc protetta da fusibile esterno da 250 mAT
Potenza assorbita massima:	0,8 W
Distanze massime	
Lunghezza massima rete pLAN:	500 m con cavo AWG22 a coppie schermate
Distanza pCO terminale:	50 m con cavo telefonico 500 m con cavo AWG22 a coppie schermate e TCONN6J000 Nota: per raggiungere la lunghezza massima utilizzare una tipologia a bus con diramazioni che non superano i 5 m.
Materiali	
Frontale trasparente:	policarbonato trasparente
Retrocontenitori grigio antracite (parete/incasso):	policarbonato +ABS
Tastiera:	gomma siliconica
Vetrino trasparente/cornice:	policarbonato trasparente
Autoestinguenza:	V0 su frontale trasparente e retrocontenitori HB su tastiera siliconica e particolari restanti
Generali	
Grado di protezione:	IP65 con montaggio a pannello IP40 con montaggio a parete UL type 1
Condizioni di funzionamento:	-20T60 °C, 90% U.R. non condensante
Condizioni di immagazzinamento:	-20T70 °C, 90% U.R. non condensante
Classe e struttura del software:	A
Classificazione secondo il grado di protezione contro le scosse elettriche:	Da incorporare in apparecchiature di classe I o II
PTI dei materiali di isolamento:	250 V
Periodo delle sollecitazioni elettriche:	lungo
Categoria di resistenza al calore e al fuoco:	D
Categoria (immunità contro le sovratensioni):	I
Inquinamento ambientale:	normale

Displaying the status of the network and firmware version

Pressing the configuration buttons (↓ ↑ ↵) together for at least 10 seconds (in pLAN mode only), displays the screen shown in Fig. 6.

The screen shown in Fig. 6 provides an example of the status of the pLAN, displaying which and how many devices are connected, and the corresponding addresses.
Key:

: pCO controllers active in network

: terminals active in network

: no device connected

The example in Fig. 4 represents:
pCO controllers active in network, addresses: 1, 2, 25
terminals active in network, addresses: 3, 4, 15, 26.

The ↓ ↑ buttons can be used to display the version of the firmware resident in the terminal (Fig. 7).

To exit the NetSTAT procedure, press ↵.

Contrast adjustment

*Use + **Prg** + ↓ ↑ buttons to adjust the contrast.*

Technical specifications

Display	
Type:	*FSTN graphic*
Backlighting:	*green LEDs (controlled by "application software")*
Graphic resolution:	*120x32 pixels*
Text mode:	*4 rows x 20 columns (font sizes 5x7 and 11x15 pixels)* *2 rows x 10 columns (font size 11x15 pixels)* *or mixed modes*
Character height:	*4.5 mm (font size 5x7 pixels)* *9 mm (font size 11x15 pixels)*
Size of active area:	*71.95x20.75 mm*
Size of display area:	*76x25.2 mm*
Keypad LEDs	
2 programmable by "application software", red and orange (Prg and Alarm buttons)	
4 green LEDs, used as backlighting for LCD (↓ ↑ ↵ and Esc buttons)	
Power supply	
Voltage:	*power supply from pCO through telephone cable or external source 18/30 Vdc protected with 2 250 mAT fuse*
Maximum power input:	*0.8 W*
Maximum distances	
Maximum pLAN length:	*500 m with AWG22 twisted pair cable*
pCO terminal distance:	*50 m with telephone cable* *500 m with AWG22 twisted pair cable and TCONN6J000* *Note: to reach the maximum length, use a bus layout, with branches not exceeding 5 m.*
Materials	
Transparent front panel:	*transparent polycarbonate*
Charcoal grey container back piece (wall/built-in):	*polycarbonate +ABS*
Keypad:	*silicon rubber*
Transparent cover glass/frame:	*transparent polycarbonate*
Self-extinguishing classification:	*V0 for transparent front panel and back piece* *HB for silicon keypad and remaining parts*
Others	
Index of protection:	*IP65 for panel mounting* *IP40 for wall mounting* *UL type 1*
Operating conditions:	*-20T60 °C, 90% r.H. non-condensing*
Storage conditions:	*-20T70 °C, 90% r.H. non-condensing*
Software class and structure:	*A*
Classification according to protection against electric shock:	*To be integrated into class 1 or 2 devices*
PTI of insulating materials:	*250 V*
Period of electric stress across insulating parts:	*long*
Category of resistance to fire and heat:	*D*
Category (immunity against voltage surges):	*I*
Environmental pollution:	*normal*

CAREL

CAREL S.p.A.
Via dell'Industria, 11 - 35020 Brugine - Padova (Italy)
Tel. (+39) 0499716611 – Fax (+39) 0499716600
http://www.carel.com – e-mail: carel@carel.com

CAREL si riserva la possibilità di apportare modifiche o cambiamenti ai propri prodotti senza alcun preavviso.
CAREL reserves the right to modify the features of its products without prior notice.

cod. +050001040 rel. 1.3 - 05.02.2004

SANYO SCROLL COMPRESSORS

For Air Conditioning
For Refrigeration

C-SB Series

C-SC Series

C-SD Series

Dalian SANYO Compressor Co., Ltd.

27,May,2009

R407C

R407C - B8 (50Hz 380-415V / 60Hz 440-460V)

Phase	Out Put	Displacement	Compressor Model	Compressor Code	Starting Method	50Hz				60Hz				Outline Graph Code
						Nominal Capacity		COP		Nominal Capacity		COP		
	HP	cm^3/rev				kW	kBTU/h	W/W	BTU/Wh	kW	kBTU/h	W/W	BTU/Wh	
3	3.5	55.7	C-SBN263H8A	809 930 88	—	9.60	32.8	2.87	9.8	11.8	40.3	2.87	9.8	B
	4	66.8	C-SBN303H8A	809 940 88	—	11.6	39.6	3.05	10.4	14.6	49.8	3.17	10.8	A
			C-SBN303H8G	809 946 88	—	11.6	39.6	3.05	10.4	14.6	49.8	3.17	10.8	At
	4.5	77.4	C-SBN353H8A	809 942 88	—	13.4	45.8	2.91	9.9	16.5	56.3	2.95	10.1	A
			C-SBN353H8G	809 944 88	—	13.4	45.8	2.91	9.9	16.5	56.3	2.95	10.1	At
	5	83.2	C-SBN373H8A	809 950 88	—	14.5	49.5	2.93	10.0	17.8	60.8	2.99	10.2	A
			C-SBN373H8G	809 956 88	—	14.5	49.5	2.93	10.0	17.8	60.8	2.99	10.2	At
	6	100.0	C-SBN453H8A	809 960 88	—	17.6	60.1	3.03	10.3	21.3	72.7	3.04	10.4	A
			C-SBN453H8G	809 966 88	—	17.6	60.1	3.03	10.3	21.3	72.7	3.04	10.4	At
	7	110.2	C-SBS235H38A	—	—	19.5	66.6	3.10	10.6	23.4	79.9	3.10	10.6	A
			C-SBS235H38B	—	—	19.5	66.6	3.10	10.6	23.4	79.9	3.10	10.6	At
	8	131.9	C-SCN583H8H	809 184 88	—	23.6	80.6	3.13	10.7	28.0	95.6	3.03	10.3	D
		137.0	C-SCN603H8H	809 181 88	—	24.5	83.6	3.16	10.8	29.1	99.4	3.08	10.5	D
			C-SCN603H8K	809 183 88	—	24.5	83.6	3.16	10.8	29.1	99.4	3.08	10.5	Dt
	10	171.2	C-SCN753H8H	809 101 88	—	29.9	102.1	3.20	10.9	35.9	122.6	3.12	10.7	E
		171.2	C-SCN753H8K	809 103 88	—	29.9	102.1	3.20	10.9	35.9	122.6	3.12	10.7	Et
	12	205.4	C-SCN903H8H	809 121 88	—	34.9	119.2	3.09	10.5	—	—	—	—	E
		205.4	C-SCN903H8K	809 123 88	—	34.9	119.2	3.09	10.5	—	—	—	—	Et

R407C - B8 (50Hz 380-415V / 60Hz 440-460V)

T3 Models

Phase	Out Put	Displacement	Compressor Model	Compressor Code	Starting Method	50Hz				60Hz				Outline Graph Code
						Nominal Capacity		COP		Nominal Capacity		COP		
	HP	cm^3/rev				kW	kBTU/h	W/W	BTU/Wh	kW	kBTU/h	W/W	BTU/Wh	
3	4.5	77.4	C-SBS165H38P	—	—	13.4	45.8	2.91	9.9	16.5	56.3	2.95	10.1	A
	6	83.2	C-SBS215H38P	—	—	17.6	60.1	3.03	10.3	21.3	72.7	3.04	10.4	A

R407C - B8 (50Hz 380-415V / 60Hz 440-460V)

EVI Models

Phase	Out Put	Displacement	Compressor Model	Compressor Code	Starting Method	50Hz cooling				50Hz heating				Outline Graph Code
						Nominal Capacity		COP		Nominal Capacity		COP		
	HP	cm^3/rev				kW	kBTU/h	W/W	BTU/Wh	kW	kBTU/h	W/W	BTU/Wh	
3	3.5	55.7	C-SBS120H38Q	—	—	10.1	34.5	3.00	10.2	10.5	35.8	3.18	10.9	Developing
	4	66.8	C-SBS145H38Q	—	—	12.1	41.3	3.10	10.6	12.2	41.7	3.20	10.9	Developing
	5	83.2	C-SBS180H38Q	—	—	15.3	52.2	3.14	10.7	15.0	51.2	3.20	10.9	Developing
	8	137.0	C-SCS295H38Q	—	—	24.5	83.6	3.16	10.8	24.6	84.0	3.22	11.0	Developing
	10	171.2	C-SCS370H38Q	—	—	29.9	102.1	3.20	10.9	30.7	104.8	3.25	11.1	Developing

R407C - B5 (50Hz 220-240V)

Phase	Out Put	Displacement	Compressor Model	Compressor Code	Starting Method	50Hz				Outline Graph Code
						Nominal Capacity		COP		
	HP	cm^3/rev				kW	kBTU/h	W/W	BTU/Wh	
1	3.5	55.7	C-SBN261H5A	809 930 45	CSR	9.70	33.1	2.85	9.7	A
			C-SBS120H15A	—	PSC	9.70	33.1	2.85	9.7	A
	4	66.8	C-SBN301H5A	809 940 45	CSR	11.8	40.3	2.95	10.1	A
			C-SBS145H15A	—	PSC	11.8	40.3	2.95	10.1	A
	4.5	77.4	C-SBN351H5A	809 942 45	PSC	13.5	46.1	2.84	9.7	A
			C-SBS165H15A	—	PSC	13.5	46.1	2.84	9.7	A
	5	83.2	C-SBN371H5A	809 950 45	PSC	14.5	49.5	2.91	9.9	A
			C-SBS180H15A	—	PSC	14.5	49.5	2.91	9.9	Developing
3	3.5	55.7	C-SBN263H5A	809 930 85	—	9.85	33.6	2.94	10.0	A
	4	66.8	C-SBN303H5A	809 940 85	—	11.5	39.3	2.99	10.2	A
	5	83.2	C-SBN373H5A	809 950 85	—	14.7	50.2	2.91	9.9	A
	6	100.0	C-SBN453H5A	809 960 85	—	17.7	60.4	3.00	10.2	A
	8	131.9	C-SCN583H5H	809 184 85	—	23.7	80.9	3.14	10.7	D
		137.0	C-SCN603H5H	809 181 85	—	24.2	82.6	3.14	10.7	D
	10	171.2	C-SCN753H5H	809 101 85	—	29.9	102.1	3.18	10.9	E
	12	205.4	C-SCN903H5H	809 121 85	—	34.8	118.8	3.08	10.5	E

R407C - B9 (60Hz 380V)

Phase	Out Put	Displacement	Compressor Model	Compressor Code	Starting Method	60Hz				Outline Graph Code
						Nominal Capacity		COP		
	HP	cm^3/rev				kW	kBTU/h	W/W	BTU/Wh	
3	5	83.2	C-SBN373H9A	809 950 89	—	18.0	61.5	3.05	10.4	A

■ Rating Condition

	R22 / R407C / R410A	
	℃	°F
Condensing Temperature	54.4	130
Evaporating Temperature	7.2	45
Sub Cooling	8.3	15
Super Heating	11.1	20

■ Rating Condition for EVI

	Cooling		Heating	
	℃	°F	℃	°F
Condensing Temperature	54.4	130	50	122
Evaporating Temperature	7.2	45	-7	19.4
Sub Cooling	8.3	15	2	3.6
Super Heating	11.1	20	11.1	20

■ Rating Condition for Refrigeration (R22 / R404A)

	fixed speed		Inverter	
	℃	°F	℃	°F
Condensing Temperature	50	122	50	122
Evaporating Temperature	-15	5	-10	14
Sub Cooling	0	0	0	0
Suntion Gas Temperature	18.3	65	18.3	65

■ Power Source

Code	Phase	50Hz	60Hz
B3	3 Phase	200V	200-220V
B5	1 Phase	220-240V	-
	3 Phase	220-240V	-
B6	1 Phase	-	208-230V
	3 Phase	-	208-230V
B8	3 Phase	380-415V	440(-460)V
B9	3 Phase		380V

■ Subscripts of Outline Graph Code

Subscript	explanation
t	The connection port of oil balance tube is attached
s	Screw type power supply connection

Operating Envelope

Suction Gas Superheat :9K
Refrigerant : R407C

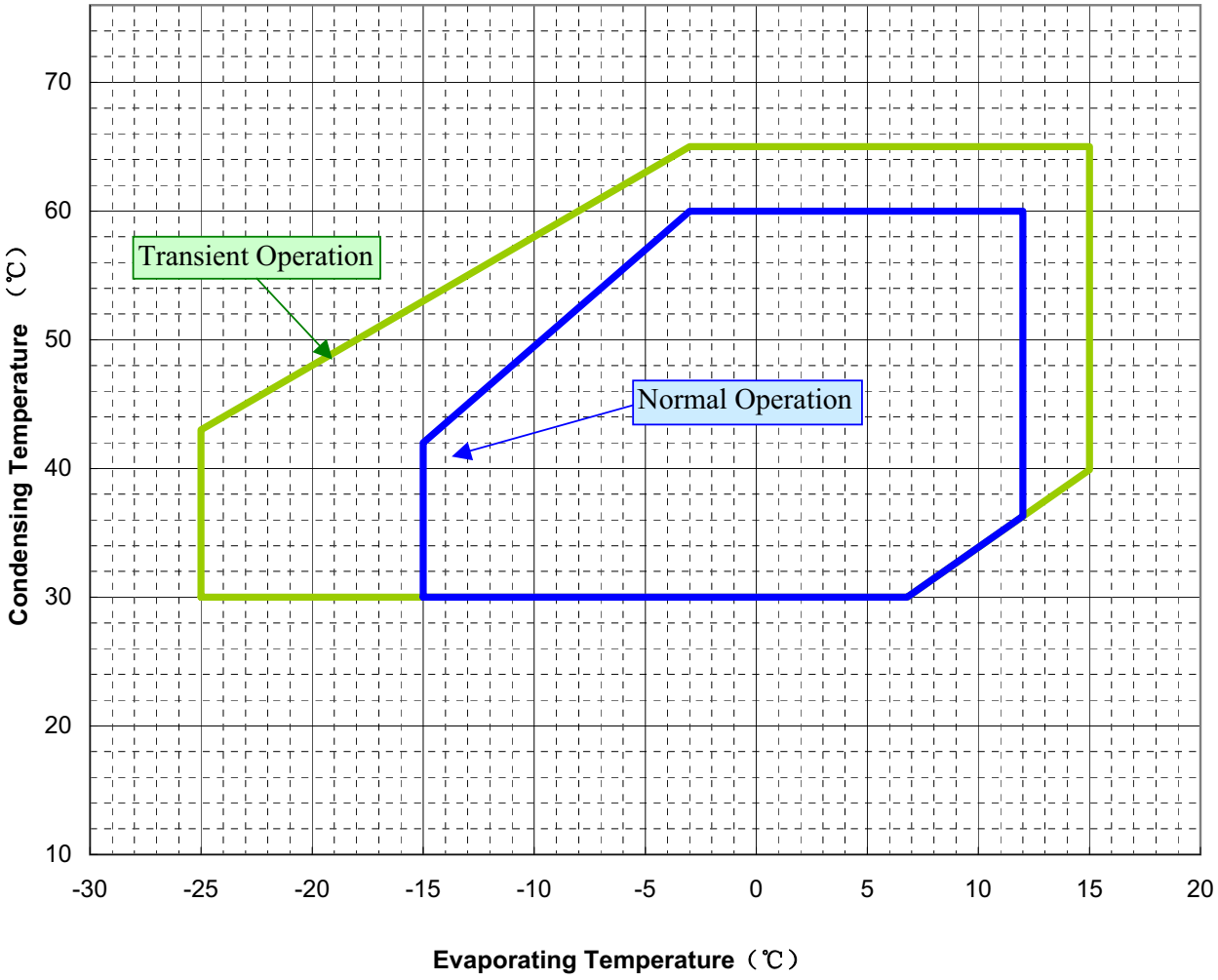

APPLICATION STANDARD & LIMIT (R407C)

The following requirements apply to Vertical type Hermetic Scroll Compressors:

Standard: Applicable to ordinary conditions in Japan JIS B8616 or equivalent conditions, such as standard rating conditions, maximum operating conditions, low temperature conditions, etc.

Limit: Applicable to transitional brief periods, such as start-up and beginning of defrost mode.

No.	Item	Standard	Limit	Note
1	Refrigerant	R407C		
2	Evaporating Temp.	-15~+12℃/[5～54 ° F] 0.20~0.65MPa(G)/[29～94psig]	-25~+15℃/[-13～59 ° F] 0.07~0.73MPa(G)[(10～106psig]	Average temp. of evaperator Inlet and outlet.
3	Condensing Temp.	+30~+60℃/[86～140 ° F] 1.17~2.56MPa(G)/[170～371psig]	+65℃/[149 ° F] 2.88MPa(G)/[418psig]	Average temp. of condensor Inlet and outlet.
4	Compression Ratio	2 ~ 6	10	
5	Winding Temp.	115℃/[240 °F] Max.	125℃/[257 °F]	
6	Shell Bottom Temp.	Upper Limit: 90 ℃/[194 °F] Max.		
		Lower Limit: Evaporating Temp.+12K / [21 °F] Min.		When comp. Is running
		Ambient Temp. +11K / [20 °F] Min.		When comp. shuts off
7	Discharge Gas Temp.	115℃/[240 °F] Max.	C-SB:130℃/[266°F] Max.	Within 100mm(4in) of the discharge fitting.
			C-SC:135℃/[275°F] Max.	Inside of the well pipe on the top of comp.
8	Suction Gas Temp.	Superheat: 5K/[10 °F] Min.	No excessive noise	It should meet the requirement of item 5, 6, 7 and 14 within 300mm of the suction fitting.
9	Running Voltage	Within ±10% of the rated voltage		Voltage at comp. terminals.
10	Starting Voltage	Three Phase Models: 85% of the rated voltage min.		Dropped voltage at comp. terminals.
		Single Phase Models: 90% of the rated voltage min.		
11	On/Off Period	ON Period: Until the oil level returns to the center of the lower bearing OFF Period: Until balance of high and low pressure is obtained		For at least 7 minutes -ON/3 minutes-OFF is recommendable.
12	Refrigerant Charge	Oil/Refrigerant(wt.)≥0.35		Specific gravity of the Oil: 0.94.
13	Life Time	200,000 cycle		
14	Minimum Oil Level	C-SB: Center of the lower bearing	C-SB:Bottom of the lower bearing	
		C-SC:No less than 70% of the initial oil charge		
15	Abnormal Pressure Rise/Drop	Pressure Rise: 3.20MPa(G) /[464psig] Max.		By high pressure switch
		Pressure Drop: 0.05MPa(G)/[7.3psig] Min.		By low pressure switch
16	System Moisture Level	200ppm Max.		
17	System Uncondensable Gas Level	1 Vol.% Max. Residual Oxygen 0.1 Vol.% Max.		24 hrs. after vacuuming: 1.01kPa Max.
18	Tilt	5° Deg.Max.		

Operation beyond the above limits must be approved by Dalian SANYO Compressor Co., Ltd. (G): Gauge Pressure

Notes

1 Installation should be completed within 15 minutes after removing the rubber plugs.

2 Do not use the compressor to compress air.

3 Do not energize the compressor under vacuumed conditon.

4 Evacuation and Refrigerant charge: Evacuate internal section in the refrigeration system from high and low pressure sides and charge liquid refrigerant from condenser outlet side. Additional charge shall be done with gas condition from low side.

5 Do not tilt over the compressor while carrying it.

6 Do not remove the paint.

7 Crankcase heater is required when the oil sump temperature is too low to meet the requirement of item 6 .

8 Voltage fluctuation between compressor terminals, during operation, shall be within 2% of the rated voltage.

9 Do not operate compressor in reverse rotational direction.

10 Suction strainers are recommended for all applications.

11 Copper Piping Stress Start/Shutdown 34.32 N/mm^2 Max.

Run 12.26 N/mm^2 Max.

INSTALLATION INSTRUCTIONS

Liquid Level Switch - Model L-21N, L-21CR and L-21VCR

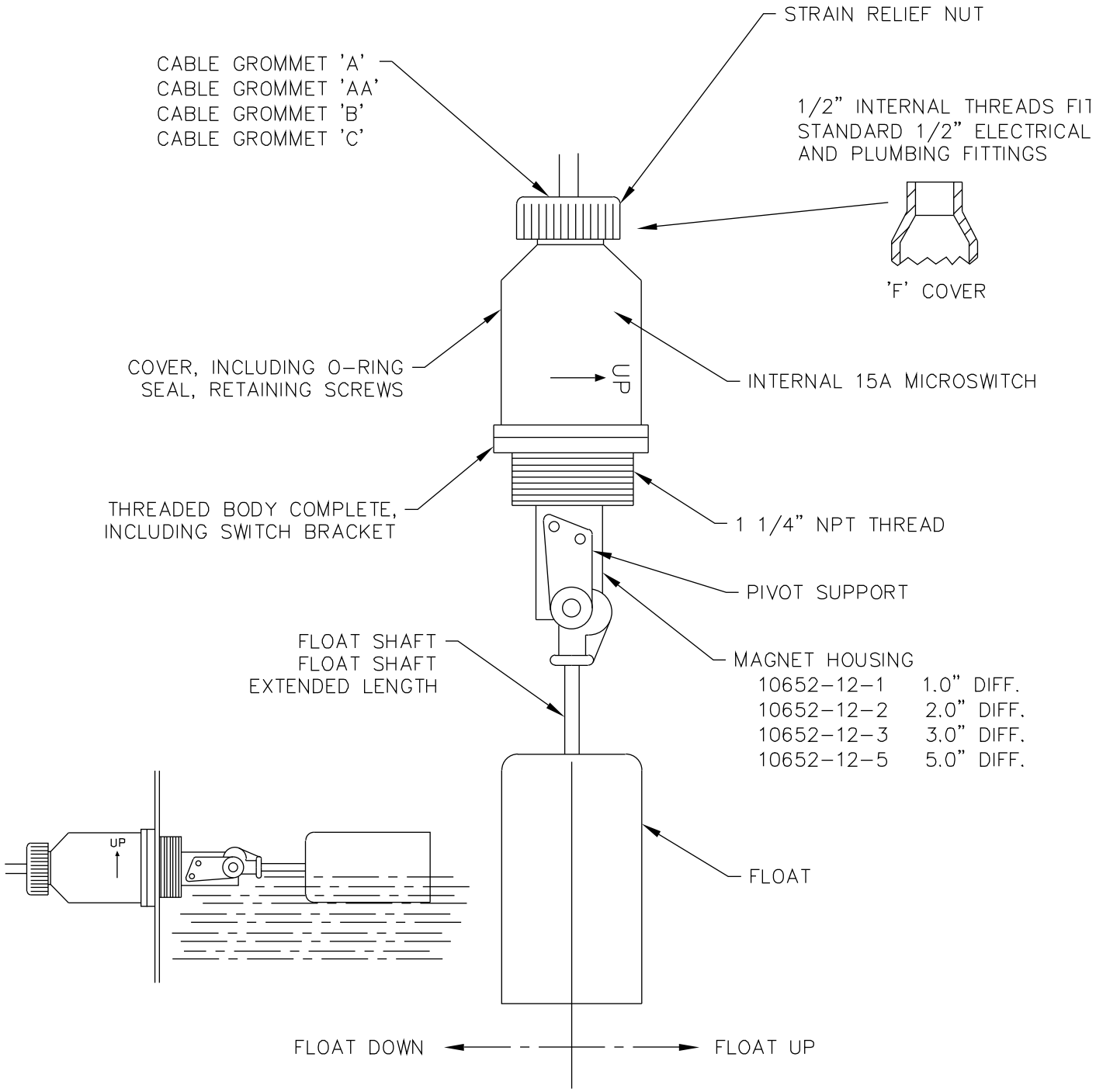

HARWIL CORPORATION

221 Lombard Street, Oxnard, CA, 93030
Phone: (805) 988-6800 FAX: (805) 988-6804
E-Mail: harwil@ix.netcom.com
Internet: www.harwil.com

INSTALLATION INSTRUCTIONS

Liquid Level Switch - Model L-21N, L-21CR and L-21VCR

INSTALLATION & OPERATING INSTRUCTIONS

1) If shipping container and contents are received damaged, place complete package in separate container and immediately call shipping company for damage inspection and file appropriate report with copy to HARWIL Corp. for product replacement and insurance adjustment.

2) If contents are not damaged, inspect units received against packing list and original purchase order. If incorrect units are received, call HARWIL Corp. immediately for resolution of problem Tel: (805) 988-6800, Fax: (805) 988-6804.

3) Check for damage or scuffing or teflon tape applied to 1-1/4" NPT threads of switch body. Retape as required with 2 to 3 layers wound clockwise looking at end of threaded body with float toward viewer.

4) Remove switch and check switch action with a multimeter while moving float up and down.

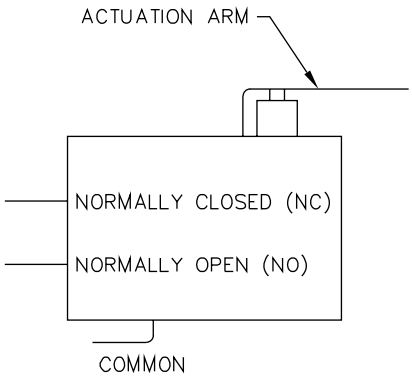

FLOAT UP/DOWN CONFIGURATION

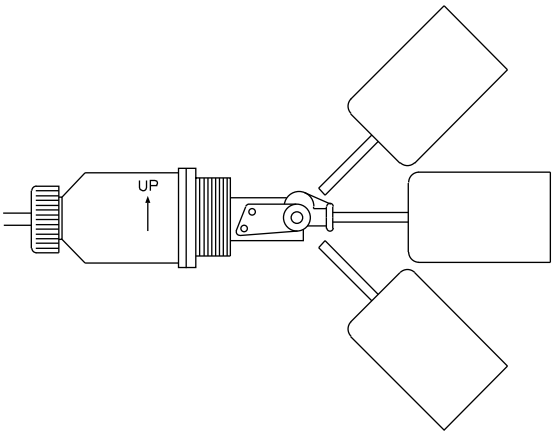

FLOAT POSITION	MULTIMETER CONNECTION	METER READING
UP	COMM. & NO TERMINALS	CONTINUITY
	COMM. & NC TERMINALS	OPEN CIRCUIT
DOWN	COMM. & NO TERMINALS	OPEN CIRCUIT
	COMM. & NC TERMINALS	CONTINUITY

5) Replace domed cover on unit and insert float through 1-1/4" NPT hole in tank and mate switchbody threads with tank threads and tighten with appropriate wrench until thread joint is leak tight and arrow on cover label is pointing vertically upward.

*NOTE: Model L-21 can be supplied with 1-1/2" x 1-1/4 " reducer bushings or larger bushings as required to fit existing large hole in tank wall.

6) Remove cover and wire as indicated below.

HARWIL CORPORATION

221 Lombard Street, Oxnard, CA, 93030
Phone: (805) 988-6800 FAX: (805) 988-6804
E-Mail: harwil@ix.netcom.com
Internet: www.harwil.com

INSTALLATION INSTRUCTIONS

Liquid Level Switch - Model L-21N, L-21CR and L-21VCR

LOW LIQUID LEVEL ALARM

Fig. 1: Wiring schematic for power applied to load when liquid level is less than set point (power to load interrupted when level increases to above set point).

Decreasing Liquid Level moves actuator in direction shown.

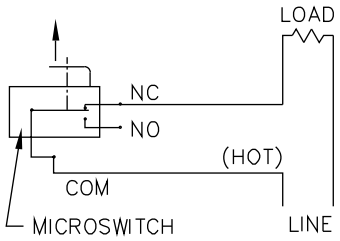

HIGH LIQUID LEVEL ALARM

Fig 2: Wiring schematic for power applied to load when liquid level is greater than set point (power to load interrupted when level decreases to below set point).

Increasing Liquid Level moves actuator in direction shown.

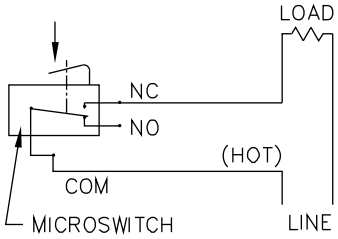

Micro switch actuation point may be monitored by an audible click or with an OHM meter before connecting line power to the switch terminals or by monitoring the voltage supplied to the load through the micro switch.

- Pump Up wiring diagram same as low level alarm shown in Fig. 1 above.
- Pump Down wiring diagram same as high level alarm show In Fig. 2 above.

Electrical Wiring:

Step 1: Remove gland nut, grommet and switch cover.
Step 2: Strip outer jacket of electrical cord back approximately 1-1/4" inches. Strip insulation from individual conductors back approximately 1/4 inch.
Step 3: Slip on terminals are supplied with each switch. Remove from switch terminals and crimp on or solder to electrical leads.
Step 4: Feed electrical cable through gland nut, grommet and switch cover as shown.
Step 5: Apply slip on terminals to appropriate contacts of microswitch. Slide cover down cable and fasten to body of switch with 4 screws provided. Slide grommet down cable and push grommet into tapered end of cover. Hold cable jacket to prevent rotation and thread gland nut firmly onto cover.

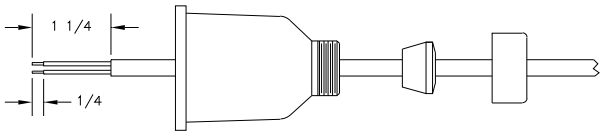

Electrical Wiring:

Step 1: Remove switch cover.
Step 2: Same as step 2 above.
Step 3: Same as step 3 above.
Step 4: Thread user supplied 1/2" flexible conduit fitting into 1/2" female thread on end of cover. Feed electrical cable through conduit fitting.

Step 5: Apply slip on terminals to appropriate male spade contacts on microswitch. Slide cover down cable and fasten to body of switch with 4 screws provided. Be sure to install "0" ring between body and cover. Connect flexible 1/2" metal or plastic conduit to conduit fitting on end of cover per

HARWIL CORPORATION

221 Lombard Street, Oxnard, CA, 93030
Phone: (805) 988-6800 FAX: (805) 988-6804
E-Mail: harwil@ix.netcom.com
Internet: www.harwil.com

INSTALLATION INSTRUCTIONS

Liquid Level Switch - Model L-21N, L-21CR and L-21VCR

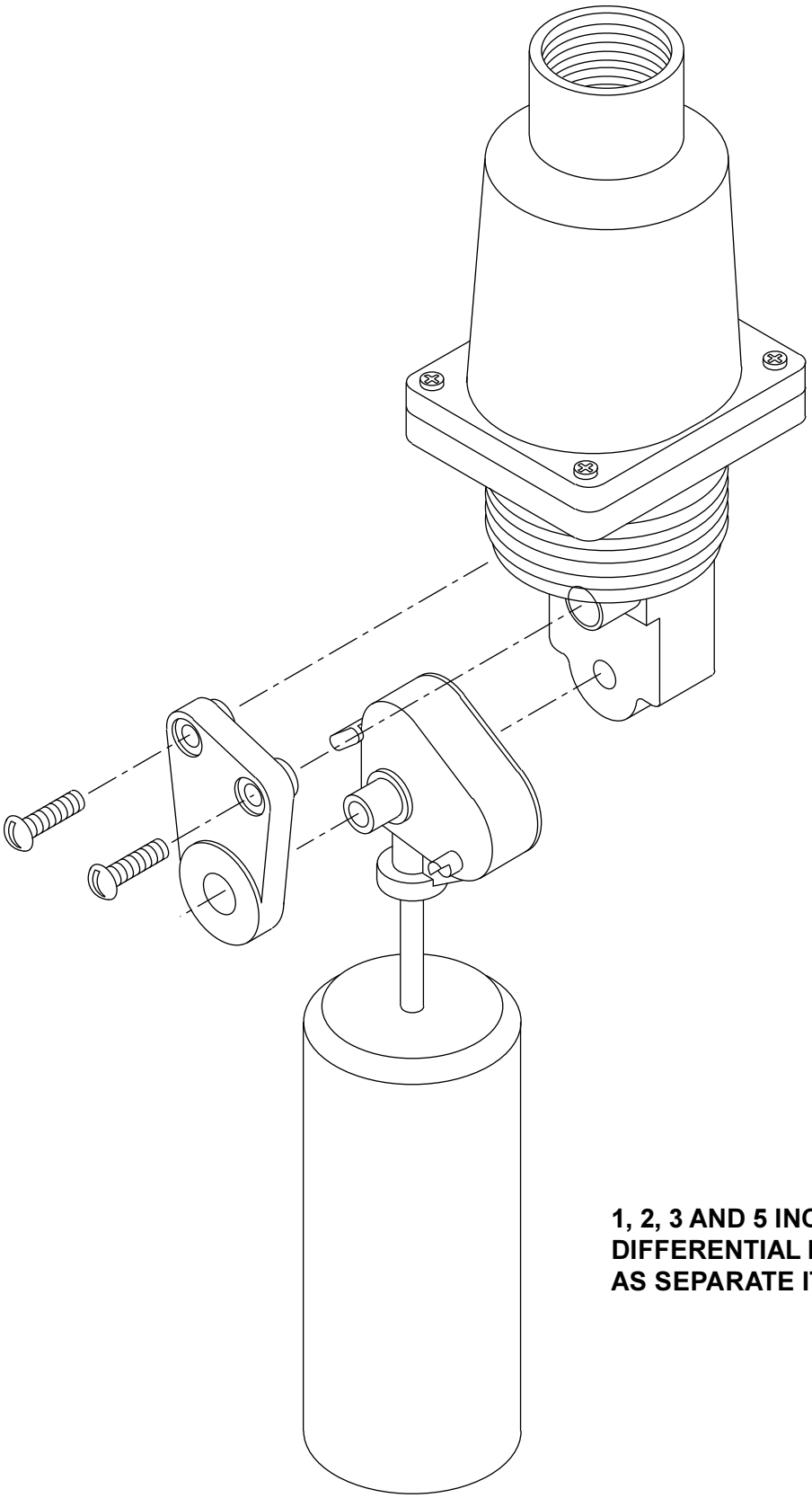

1, 2, 3 AND 5 INCH LINE REPLACEABLE DIFFERENTIAL FLOAT UNITS AVAILABLE AS SEPARATE ITEMS

HARWIL CORPORATION

221 Lombard Street, Oxnard, CA, 93030
Phone: (805) 988-6800 FAX: (805) 988-6804
E-Mail: harwil@ix.netcom.com
Internet: www.harwil.com

INSTALLATION INSTRUCTIONS

Liquid Level Switch - Model L-21N, L-21CR and L-21VCR

L-21N
(Series 21300)

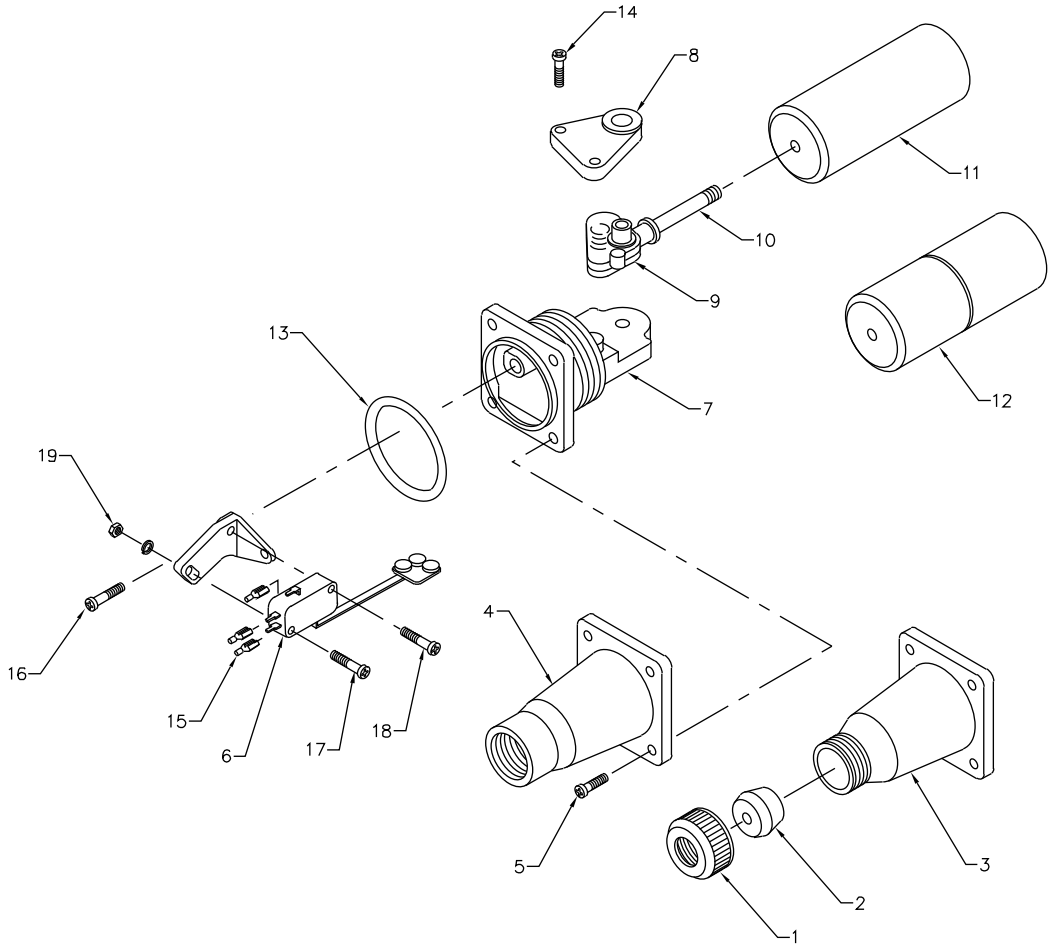

HARWIL CORPORATION

221 Lombard Street, Oxnard, CA, 93030
Phone: (805) 988-6800 FAX: (805) 988-6804
E-Mail: harwil@ix.netcom.com
Internet: www.harwil.com

Limited Warranty

Products manufactured by Walrus Pumps Co (Walrus) are warranted to the first user only to be free of defects in material and workmanship for a period of 12 months from date of installation, but no more than 24 months from date of shipment. Walrus' liability under this warranty shall be limited to repairing or replacing at our election, without charge, FOB Walrus' distribution center or authorized service agent. Walrus will not be liable for any cost of removal, installation, transportation or any other charges that may arise in connection with warranty claim.

The warranty period commences on the date of original purchase of the equipment. Proof of purchase and installation date, failure date, and supporting installation data must be provided when claiming repairs under warranty.

This warranty is subject to due compliance by the original purchaser with all directions and conditions set out in the installation and operating instructions. Failure to comply with these instructions, damage or breakdown caused by fair wear and tear, negligence, misuse, incorrect installation, inappropriate chemicals or additives in the water, inadequate protection against freezing, rain or other adverse weather conditions, corrosive or abrasive water, lightning or high voltage spikes or through unauthorized persons attempting repairs are not covered under warranty.

Walrus will not be liable for any incidental or consequential damages, losses, or expenses, arising from installation, use, or any other causes. There are no express or implied warranties, including merchantability or fitness for a particular purpose, which extend beyond those warranties described or referred to above.

Certain states do not permit the exclusion or limitation of incidental or consequential damages or the placing of limitations on the duration of an implied warranty, therefore, the limitations or exclusions herein may not apply. This warranty sets forth specific legal rights and obligations, however, additional rights may exist, which may vary from state to state.

Supersedes all previous publications

WALRUS Walrus Pump Co., Ltd.

Web: www.walruspump.com E-mail: walrus.pump@msa.hinet.net

C099C008E007-00

WALRUS

TPHK Series Immersible Pump

Instruction Manual

ISO 9001 Certified

Walrus Pump Co., Ltd.

EC Declaration of Conformity

*We **WALRUS PUMP CO., LTD.** declare under our sole responsibility that the products : Immersible Pump - **TPHK** series, to which this declaration relates, are in conformity with the Council Directives relating to*

- 98/37/EEC (Machinery Directive)

Standard used : EN 292 : 1991

EN 1050 : 1996

Pr EN 809 : 1992

- 89/336/EEC (Electromagnetic compatibility Directive)

- 73/23/EEC (Low-Voltage Directive)

Standard used : EN60335-1

EN60335-2-51 : 1997

R&D department manager: Kao Tien

Manager: Kao Tien chuan

Address: 83 -14, DA PIAN TOU, HO CHUOH VILLAGE,

SAN CHI, TAIPEI HSIEN, TAIWAN.

TEL:886-2-26361123~7

FAX: 886-2-86352660

Date: May 10, 2004

Please read this instruction manual carefully before installing your new system as failures caused by incorrect installation and operation are not cover by the warranty.

1. Application

1.1. The TPHK series is multi-stage centrifugal pump designed for industrial use, especially for machine tools.

1.2 The pump can not be used to transfer explosive liquids; such as gasoline, diesel oil or similar liquids. It is suitable to carry liquids such as water, coolant, low viscosity or other non-corrosive liquids.

2. Product Code Designation

The standard range of pumps includes complete impeller in chamber combinations. Upon request, a special length can be supplied by fitting empty intermediate chambers instead of standard chambers with impellers. The pump nameplate indicates the number of chambers and impellers fitted to the pump.

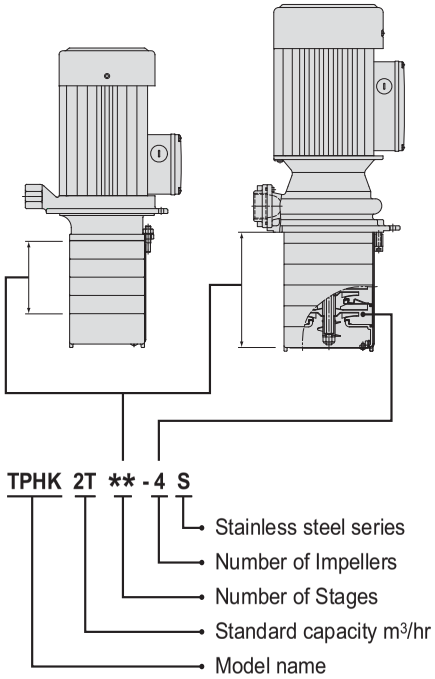

3. Operating Limits

1. Ambient temperature :Max. 50°C(122°F)
2. Liquid temperature range: 0°C(32°F) to 90°C(194°F)
3. Operating pressure :Max. 10 kg/cm²
4. Submerged depth :Min. 65mm

4. Installation

The pump has hot surface on the motor. It must be installed so that persons cannot accidentally come into contact the hot surface.

4.1. Submerged Depth

To avoid dry running and damage the pump during operation, the minimum pump submerged depth is 65mm (2½") as shown in Fig 1. In addition, the bottom of the pump suction inlet must be at least 25 mm (1") above the bottom of the tank.

Fig.1

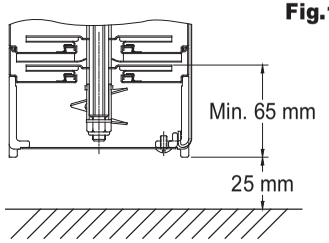

5. Electrical Connection

5.1 The electrical connection should be carried out in accordance with local regulations. Never make any connections unless the electricity supply has been switched off.

5.2. The electrical hazard warning mark is placed outside the connection box. Be careful.

5.3. Electrical data (voltage and frequency) are shown on the pump nameplate. Verify if these data match your electricity supply. A circuit breaker should be installed and the grounding be properly connected for your safety.

5.4. Make electrical connection in accordance with connecting diagram located inside the

connection box. The motor current must be within the rated amps range indicated on nameplate. Three phase motor requires a magnetic starter for safety.

5.5. For three phase motors, please check the correct direction of rotation of the pump on the motor fan cover. When seen from motor fan cover end, the pump should rotate clockwise. You can reverse the direction of rotation by interchanging any two of the incoming supply wires.

6. Start-up

Before starting the pump, make sure the following:

6.1. For three phase motors, verify if the rotating direction is correct. It should be clockwise viewing from the motor fan cover end.

6.2. All piping joints are completely tight. Leakage in piping may cause the pump hydraulic loss.

6.3. The pump is filled with liquid.

6.4. The suction filter is not blocked by any foreign objects.

7. Operation and Maintenance

It is dangerous to operate the pump against a closed discharge outlet because it will cause extremely high liquid flow temperature and damage the pump in a few minutes.

7.1. Lubrication

The mechanical seal and shaft sleeves are lubricated by the pumped liquid.

7.2. Suction filter

Always keep suction filter clean and make sure it is not blocked by impurities.

7.3. Periodic checks

The following checks should be carried out periodically to ensure the normal operation.

7.3.1. Check the quantity of liquid and operating pressure.

7.3.2. Check there are no leaks on piping joints.

7.3.3. Check the tripping of the motor starter.

7.3.4. Check that all controls are functioned normally.

7.4. The pump must not be used to transfer explosive liquids. In systems with hot liquids (over 60°C), extra caution should be exercised to prevent from personal injury.

7.5. The pump should not be used to transfer toxic or contaminated liquids. Please carefully follow all instructions in the manual as Walrus may refuse to accept the contaminated pump for servicing.

8. Sound pressure level

Motor	dB(A)	Motor	dB(A)
TPHK2T3-1	<70	TPHK4T3-1	<70
TPHK2T3-2	<70	TPHK4T3-2	<70
TPHK2T3-3	<70	TPHK4T3-3	<70
TPHK2T4-4	<70	TPHK4T4-4	<70
TPHK2T5-5	<70	TPHK4T5-5	<70
TPHK2T6-6	<70	TPHK4T6-6	<70
TPHK8T6-3	71	TPHK12T6-1	71
TPHK8T6-4	76	TPHK12T6-2	76
TPHK8T6-5	76	TPHK12T6-3	76

9. Fault Finding

Make sure electricity supply has been switched off before attempting to diagnose any fault

Fault	Cause
9.1 Motor does not start	a. No electricity supply
	b. Fuses are blown.
	c. Motor overheating relay tripped.
	d. Defective magnetic contactors.
	e. Control circuit malfunction.
9.2. Motor cut out during operation.	a. Fuses blown or breakers tripped.
	b. Overheating relay tripped.
	c. Control circuit malfunction.
	d. Pump locked up by foreign objects.
9.3. Pumped capacity is not constant.	a. Pump impeller blocked by impurities.
	b. Insufficient liquid level in the tank. (See Sec. 4.1)
9.4. Pump runs but gives no liquid.	a. Suction filter blocked by impurities.
	b. Liquid level is too low (See Sec. 4.1)
	c. Incorrect rotating direction.

TPHK 2T/4T

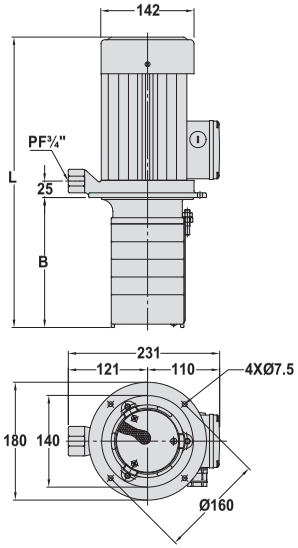

TPHK 8T/12T

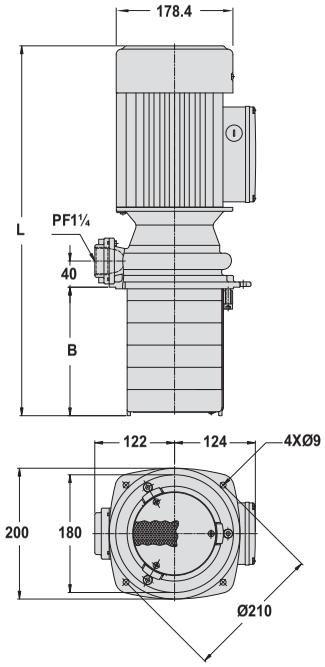

Dimensions and Weights

Model	B (mm)	L (mm)	N.W.(kg)
TPHK 2T 3 -1	145	350	10.9
TPHK 2T 8 -1	235	440	11.9
TPHK 2T 3 -2	145	350	11.1
TPHK 2T 5 -2	181	386	11.5
TPHK 2T 9 -2	253	458	12.3
TPHK 2T 3 -3	145	350	11.2
TPHK 2T 4 -3	163	368	11.4
TPHK 2T 5 -3	181	386	11.6
TPHK 2T 6 -3	199	404	11.8
TPHK 2T 8 -3	235	440	12.2
TPHK 2T11-3	289	494	12.6
TPHK 2T 4 -4	163	368	11.5
TPHK 2T 6 -4	199	404	11.9
TPHK 2T 5 -5	181	426	12.7
TPHK 2T 6 -6	199	444	13.5
TPHK 2T 8 -6	235	480	13.9
TPHK 2T 9 -6	253	498	14.1
TPHK 2T10-6	271	516	14.2
TPHK 2T11-6	289	534	14.4
TPHK 2T 7 -7	217	462	13.0
TPHK 4T 2 -1	145	350	10.8
TPHK 4T 2 -2	145	350	11.0
TPHK 4T 3 -2	172	377	11.2
TPHK 4T 4 -2	199	404	11.4
TPHK 4T 6 -2	253	458	11.6
TPHK 4T 3 -3	172	417	11.7
TPHK 4T 4 -3	199	444	11.9
TPHK 4T 5 -3	226	471	12.1
TPHK 4T 6 -3	253	498	12.3
TPHK 4T 8 -3	307	552	12.7
TPHK 4T 4 -4	199	444	13.3
TPHK 4T 5 -4	226	471	13.5
TPHK 4T 6 -4	253	498	13.7
TPHK 4T 5 -5	226	471	13.9
TPHK 4T 8 -5	307	552	14.5
TPHK 4T 6 -6	253	498	14.1
TPHK 4T 8 -6	307	552	14.6
TPHK 4T 7 -7	280	525	14.6
TPHK 4T 8 -7	307	552	14.8
TPHK 8T 3 -3	95.5	464.5	23.0
TPHK 8T 6 -3	199	568	24.3
TPHK 8T 4 -4	130	499	27.0
TPHK 8T 6 -4	199	568	28.0
TPHK 8T 5 -5	164.5	533.5	28.0
TPHK12T 6 -1	199	568	27.0
TPHK12T 6 -2	199	568	29.0
TPHK12T 6 -3	199	568	30.0

cod. +050000485 rel. 1.5 - 09.02.2006

SPKT*R0 trasduttori di pressione raziometrici / *ratiometric pressure trasducers*

CAREL

LEGGI E CONSERVA QUESTE ISTRUZIONI

READ AND SAVE THESE INSTRUCTIONS

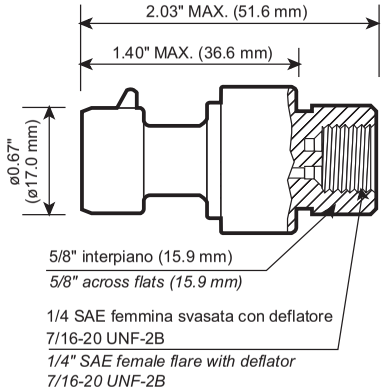

Fig.1

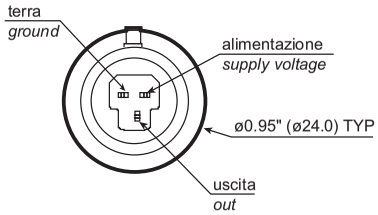

Fig.2

per cavo SPKC*/*for SPKC* cable*: uscita/*out* = bianco/*white*
alimentazione/supply = nero/*black*
terra/*ground* = verde/*green*

Nota/*Note:* Campo di temperatura connettore -35T105°C
Connector temperature range -35T105°C

(I) Vi ringraziamo per la scelta fatta, sicuri che sarete soddisfatti del vostro acquisto.

Caratteristiche generali

Le sonde elettroniche di pressione CAREL sono state sviluppate per essere applicate nei settori della refrigerazione e del condizionamento. La versione raziometrica è disponibile in 5 diversi range di pressione, di seguito riportati.

Descrizione codici e modelli

codice	serigrafia (1)	Pressione (con 5 V) psiA		Pressione (con 5 V) bar (2)		Modello	Materiale	over range	
		0.5 V	4.5 V	**0.5 V**	**4.5 V**			psiA	**bar**
SPKT0053R0	2CP5-52	0	75	**-1,0**	**4,2**	femmina	ottone	375,0	**24,9**
SPKT0013R0	2CP5-46	0	150	**-1,0**	**9,3**	femmina	ottone	450,0	**30,0**
SPKT0043R0	52CP36-01 2CP5-66	15	265	**0,0**	**17,3**	femmina	ottone	7895,0	**53,8**
SPKT0033R0	2CP5-47	15	515	**0,0**	**34,5**	femmina	ottone	1030,0	**70,0**
SPKT00B6R0	2CP50-1	15	667	**0,0**	**45,0**	femmina	acciaio placcato	1335,0	**91,0**

(1) per distinguere i trasduttori riferirsi alla serigrafia sul corpo del sensore come da tab.
(2) Il range è espresso in bar relativi
Nota: tutti i sensori sono di tipo Sealed Gage.

Accessori

Cavo con connettore 2 m: SPKC002300 IP55
Cavo con connettore 5 m: SPKC005300 IP55
Cavo con connettore 2 m: SPKC002310 IP67
Cavo con connettore 5 m: SPKC005310 IP67

Collegamenti

Nella Fig. 2 viene indicato lo schema di collegamento della sonda:
- il cavo di colore nero riceve l'alimentazione (5 Vdc);
- il cavo di colore bianco è il segnale di uscita relativo alla pressione letta;
- il cavo di colore verde è il riferimento dell'alimentazione.

Caratteristiche tecniche

alimentazione	4,5...5,5 Vdc
uscita	0,5...4,5 Vdc
filetto connettore	7/16" 20 UNF
condizioni di funzionamento	-40T120 °C
precisione	+/- 1,2% intervallo
errore di temperatura	+/- 0,013%/°C
grado di protezione	IP65
shock (50...2000 Hz)	11g**
grado di inquinamento ambientale	normale
materiale a contatto con il fluido	ottone o acciaio
separazione con membrana plastica	compatibili con fluidi refrigeranti R12, R22, R134A, R404A, R407C, R410A, R502, R50. **Non compatibili** con R717 (ammoniaca), da non usare con acqua e glicole.

**: g= accelerazione di gravità

(GB) *Thank you for your choice. We trust you will be satisfied with your purchase.*

General characteristics

The CAREL electronic pressure probes have been developed for the application in the refrigeration and air conditioning sectors. The ratiometric version is available in 5 different ranges of pressure, as following.

Description of codes and models

code	*Silk-screen (1)*	*Pressure (with 5 V) psiA*		*Pressure (with 5 V) bar (2)*		*Model*	*Body Material*	*over range*	
		0.5 V	*4.5 V*	***0.5 V***	***4.5 V***			*psiA*	***bar***
SPKT0053R0	*2CP5-52*	*0*	*75*	***-1,0***	***4,2***	*female*	*brass*	*375,0*	***24,9***
SPKT0013R0	*2CP5-46*	*0*	*150*	***-1,0***	***9,3***	*female*	*brass*	*450,0*	***30,0***
SPKT0043R0	*52CP36-01 2CP5-66*	*15*	*265*	***0,0***	***17,3***	*female*	*brass*	*7895,0*	***53,8***
SPKT0033R0	*2CP5-47*	*15*	*515*	***0,0***	***34,5***	*female*	*brass*	*1030,0*	***70,0***
SPKT00B6R0	*2CP50-1*	*15*	*667*	***0,0***	***45,0***	*female*	*plated steel*	*1335,0*	***91,0***

(1) to distinguish the transducers refer to the silk screen on the sensor like shown in the tab.
(2) The range is expressed in in relative bar
Note: *all the sensors are Sealed Gage type.*

Accessories

Cable with connector 2 m: SPKC002300 IP55
Cable with connector 5 m: SPKC005300 IP55
Cable with connector 2 m: SPKC002310 IP67
Cable with connector 5 m: SPKC005310 IP67

Connections

Fig. 2 illustrates the connection diagram of the probe with the male connector:
- *the black cable receives power supply (5 Vdc);*
- *the white cable is the output signal relevant to the read pressure;*
- *whereas the green cable refers to the power supply.*

Technical specifications

power supply	*4.5 to 5.5Vdc*
output	*0.5 to 4.5Vdc*
connector thread	*7/16" UNF*
operating conditions	*-40T120°C*
precision	*+/- 1.2% span*
temperature error	*+/- 0.013%/°C*
protection degree	*IP65*
shock (50 to 2000Hz)	*11g***
environmental pollution level	*normal*
material in contact with the fluid	*brass or plated steel*
separation with plastic membrane	*compatible with cooling fluids R12, R22, R134A, R404A, R407C, R410A, R502, R50.* ***Not compatible*** *with R717 (ammonia), not to be used with water and glycol.*

***: g= gravitational acceleration*

Esempi di collegamento a strumentazione CAREL / *Examples of connection to CAREL instrument*

Collegamento con il pCO¹ / *pCO¹ connection*

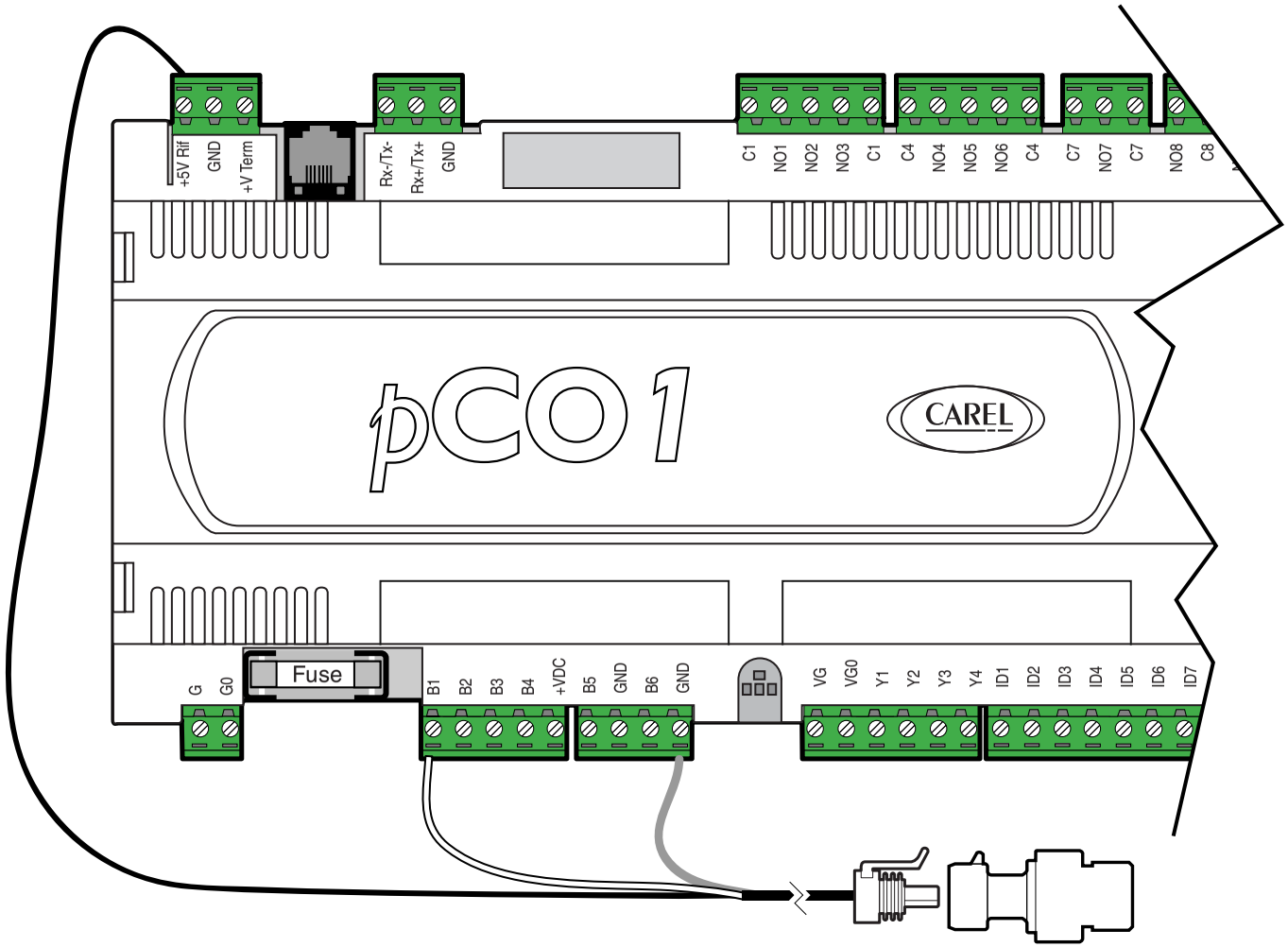

pCO¹	Sonda / *Probe*
Bn= 1, ... , 4	Filo bianco = segnale di pressione *White wire = Pressure signal*
+5V rif	Filo nero = alimentazione *Black wire = power supply*
GND	*Filo verde = riferimento alimentazione* *Green wire = supply reference*

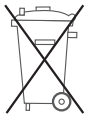

"L'apparecchiatura (o il prodotto) deve essere oggetto di raccolta separata in conformità alle vigenti normative locali in materia di smaltimento"
"The appliance (or the product) must be disposed of separately in accordance with the local waste disposal legislation in force"

CAREL

CAREL S.p.A.
Via dell'Industria, 11 - 35020 Brugine - Padova (Italy)
Tel. (+39) 0499716611 – Fax (+39) 0499716600
http://www.carel.com – e-mail: carel@carel.com

CAREL si riserva la possibilità di apportare modifiche o cambiamenti ai propri prodotti senza alcun preavviso.
CAREL reserves the right to modify the features of its products without prior notice.

cod. +050000485 rel. 1.5 - 09.02.2006

P266 Series Single-Phase Condenser Fan Speed Control

Installation Instructions

P266xxx-x

Part No. 24-7664-2705, Rev. B
Issued April 29, 2009
Supersedes January 21, 2009

Application

IMPORTANT: Use this P266 Single-Phase Condenser Fan Speed Control only as an operating control. Where failure or malfunction of the P266 fan speed control could lead to personal injury or property damage to the controlled equipment or other property, additional precautions must be designed into the control system. Incorporate and maintain other devices, such as supervisory or alarm systems or safety or limit controls, intended to warn of or protect against failure or malfunction of the P266 fan speed control.

CAUTION: Risk of Property Damage
Use only single-phase Permanent Split Capacitor (PSC) motors approved by the manufacturer for speed control application with the P266 control. Failure to use a single-phase PSC motor may damage the motor and other property.

The P266 Single-Phase Condenser Fan Speed Control is a cost-effective, compact, weather-resistant, and durable speed control for single-phase, PSC motors used in a wide variety of low-ambient refrigeration and air conditioning condenser applications.

The P266 fan speed controls are designed to replace the Johnson Controls® P66 Series and P215 Series Fan Speed Controls and provide additional features and application flexibility.

Mounting

Location and Mounting Considerations

Observe these guidelines when locating and mounting a P266 fan speed control:

- Ensure that the mounting surface and mounting hardware can support the control and wiring.

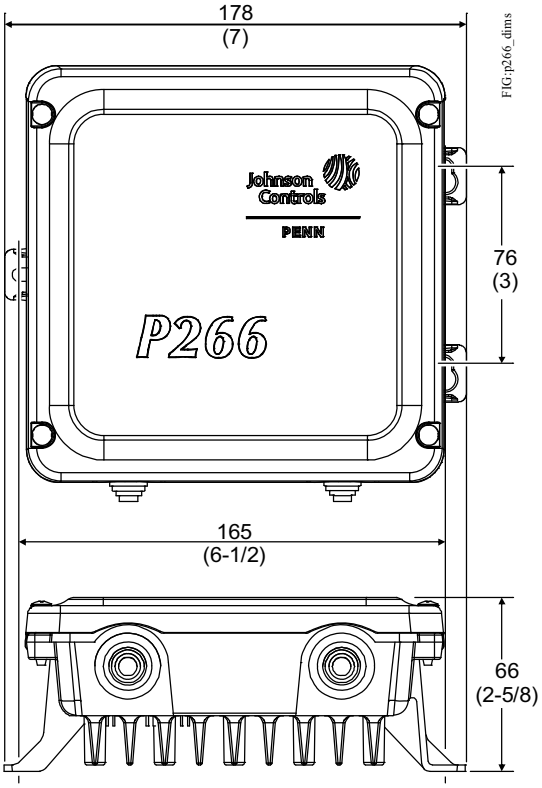

Figure 1: P266 Single-Phase Condenser Fan Speed Control Mounting Dimensions

- Mount the P266 control upright on a vertical surface with the heat sink fins oriented vertically and the conduit/electrical holes facing down.
- Ensure that air can flow through the heat sink fins and provide 10 cm (4 in.) minimum clearance around the heat sink.
- Mount the P266 control in a location away from sources of excessive heat and within the specified ambient operating conditions. See *Technical Specifications* for ambient operating conditions.

Wiring

Refer to the model-specific wiring diagram located on the interior label of the P266 control and observe these guidelines when wiring the P266 fan speed control:

WARNING: Risk of Electric Shock. Disconnect each of multiple power supplies before making electrical connections. More than one disconnect may be required to completely de-energize equipment. Contact with components carrying hazardous voltage can cause electric shock and may result in severe personal injury or death.

IMPORTANT: Do not connect supply power to the P266 fan speed control before finishing wiring and checking all wiring connections. Short circuits or improperly connected wires can result in damage to the P266 control and void any warranty.

IMPORTANT: Do not exceed the P266 fan speed control electrical ratings. Exceeding P266 control electrical ratings can result in permanent damage to the P266 control and void any warranty.

IMPORTANT: Use copper conductors only. Make all wiring in accordance with local, national, and regional regulations.

IMPORTANT: Electrostatic discharge can damage P266 control components. Use proper Electrostatic Discharge (ESD) precautions during installation and servicing to avoid damaging P266 components.

- Ensure that the wires between the P266 control and the fan motor do not exceed 15 m (50 ft).
- Wires connected to the line-voltage terminal block must be 3.31 mm^2 (12 AWG) or smaller.
- Low-voltage wires must be less than 30 m (100 ft).

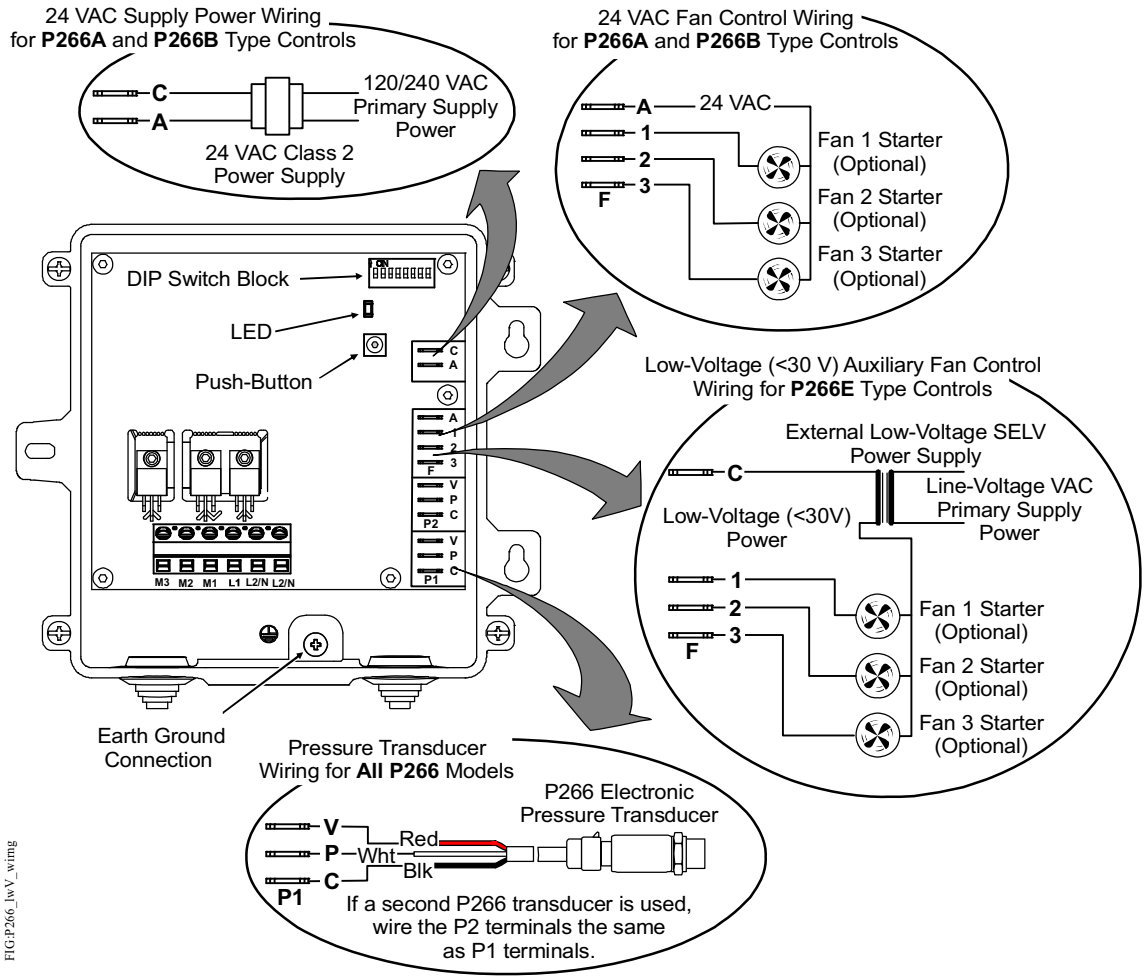

Figure 2: P266 Control Physical Features and Low-Voltage Wiring

Low-Voltage Wiring

Figure 2 shows the P266 control features under the housing cover and the low-voltage wiring diagrams for the P266A, P266B, and P266E Type control models.

High-Voltage Wiring

Figure 3 shows the high-voltage wiring diagrams for the P266A and P266B Type control models. Figure 4 show the high-voltage wiring diagrams for the P266E Type control models.

IMPORTANT: The L2/N terminal must be connected to line voltage in order for a P266 control to comply with the FCC and IEC Class B radio frequency interference emissions limit.

Use Table 1 to determine the high-voltage wiring options available for P266A, P266B, and P266E Type control models.

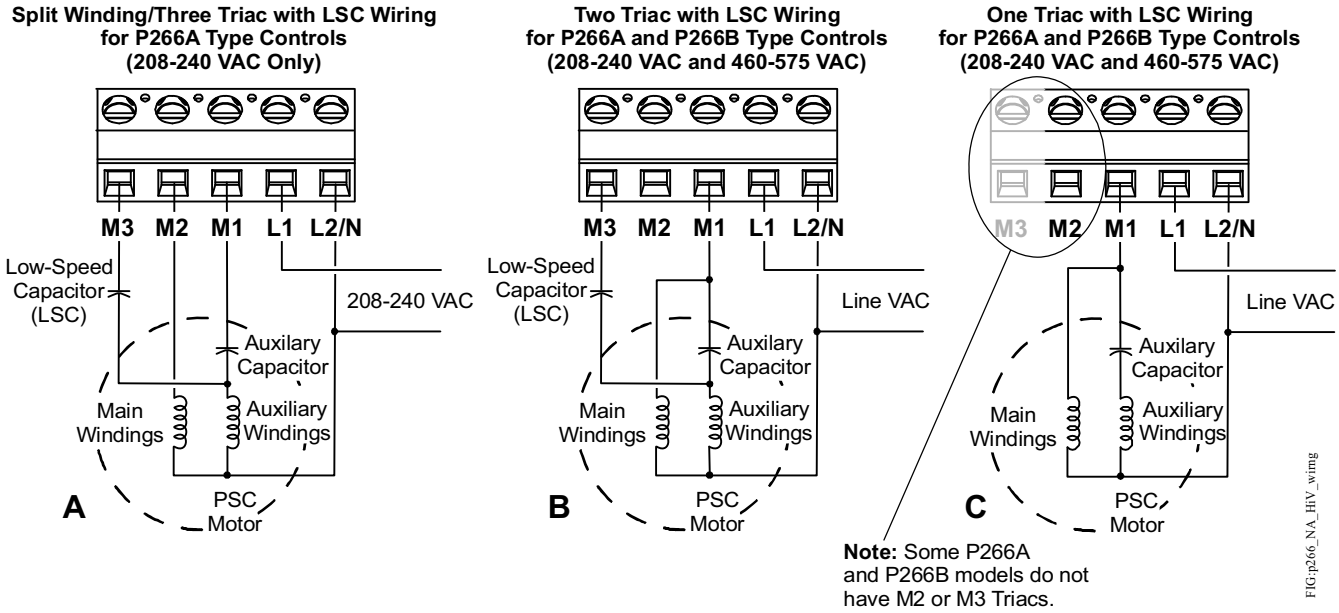

Figure 3: High-Voltage Wiring Options for P266A and P266B Type Controls

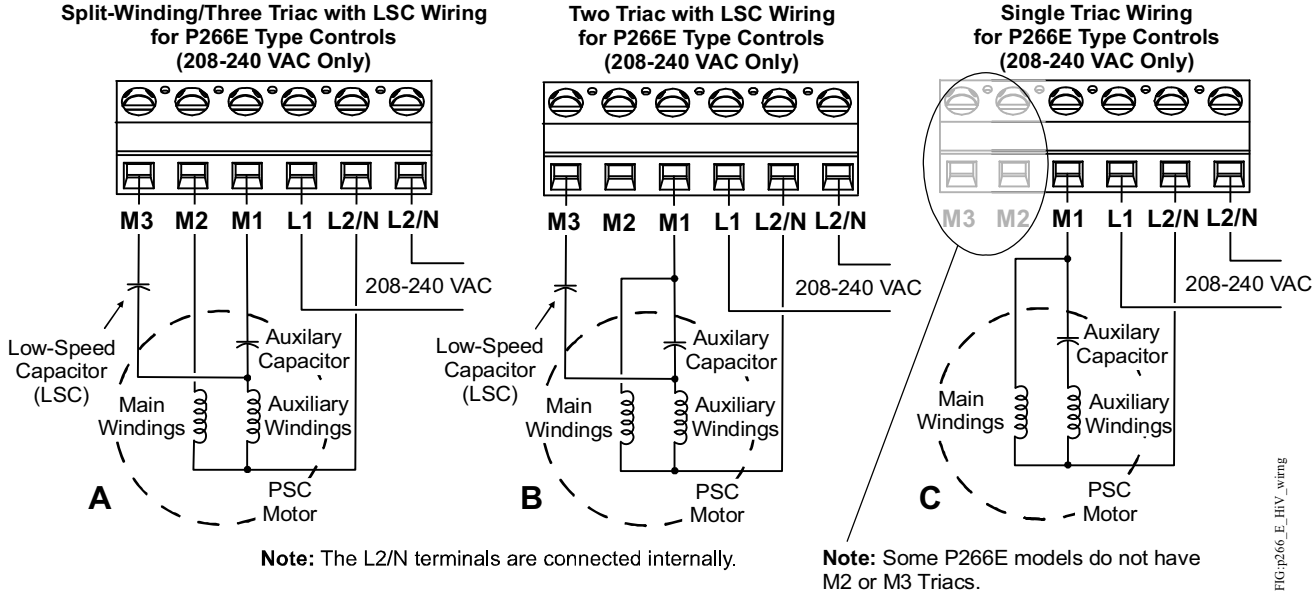

Figure 4: High-Voltage Wiring Options for P266E Type Controls

Table 1: Product Type High-Voltage Wiring Options and Voltage Ranges

Product Type Number	Split Winding/Three Triac with Low-Speed Capacitor Wiring for...		Two Triac with Low-Speed Capacitor Wiring for...		Single Triac Wiring for...	
	208-240 VAC	460-575 VAC	208-240 VAC	460-575 VAC	208-240 VAC	460-575 VAC
P266AA	See Figure 3A	--	See Figure 3B	--	See Figure 3C	--
P266AB	See Figure 3A	--	See Figure 3B	--	See Figure 3C	--
P266AC	--	--	--	--	See Figure 3C	--
P266AD	--	--	--	--	See Figure 3C	--
P266BC	--	--	--	--	--	See Figure 3C
P266BD	--	--	--	--	--	See Figure 3C
P266BG	--	--	--	See Figure 3B	--	See Figure 3C
P266BH	--	--	--	See Figure 3B	--	See Figure 3C
P266EA	See Figure 4A	--	See Figure 4B	--	See Figure 4C	--
P266EB	See Figure 4A	--	See Figure 4B	--	See Figure 4C	--
P266EC	--	--	--	--	See Figure 4C	--
P266ED	--	--	--	--	See Figure 4C	--
P266EE	--	--	--	--	See Figure 4C	--
P266EF	--	--	--	--	See Figure 4C	--

Setup and Adjustments

All P266 controls ship with factory-set default values and mode settings. In most applications, the default values and modes do not require field adjustment.

If your P266 control application requires you to change the value or mode settings, you must:

1. Calculate the new values and determine the new mode settings required for your application. (See *P266 Control Values and Modes*.)
2. Change the existing settings on the control to the new values and modes using the P266 control setup interface. (See *Setting Values and Modes*.)

P266 Control Setup Interface

The P266 control setup interface consists of a DIP switch block with eight binary switches, a push button switch, and a green Light-Emitting Diode (LED) (Figure 2). You can change the factory-set default values and modes by repositioning the DIP switches and saving the new settings. The number of LED flashes (in sequence) indicates which value and/or modes that you are saving. See Table 2 for more information about LED flash sequences, values, and modes.

During normal operation, the green LED is On/lit constantly. When you **press and hold** the push button, the LED goes Off for 3 seconds then flashes two times. The LED then goes Off again for 3 seconds and flashes three times, and continues this pattern until seven flashes or until you release the push button.

Each sequence of flashes indicates a value or a value and set of mode settings. Releasing the push button after the desired flash sequence saves the value and/or modes that are currently set on the DIP switch block. See Table 2 for more information.

P266 Control Values and Modes

P266 controls have up to ten values and modes (in six flash sequences) that can be changed in the field. See Table 2 for more information about flash sequences and the associated values and modes.

Start Voltage Value

The start voltage (VAC) is the voltage delivered by the P266 control to the fan motor to run the motor at minimum speed in your application.

The **Start Voltage value** is a percentage of the P266 control's input voltage. Use the following formula to calculate the Start Voltage value for your application.

$$\frac{\textbf{Start Voltage (VAC)}}{\textbf{P266 Control Input Line- Voltage (VAC)}} = \textbf{Start Voltage Value (\%)}$$

Low Pressure Mode

Low Pressure Mode determines whether the fan motor is either On (at start voltage/minimum speed) or Off when the sensed pressure at the P266 transducer is below the start pressure setpoint.

Start Pressure Value

Start pressure (psi or bar) is the pressure setpoint at which the P266 control outputs the start voltage and runs the fan motor at minimum speed. **Start Pressure value** is a function of the start pressure setpoint and the pressure range of the referenced P266 transducer. Use the following formula to calculate the Start Pressure value. See Table 3 for P266 transducer pressure ranges.

$$\frac{\textbf{Start Pressure Setpoint (bar or psi)}}{\textbf{P266 Transducer Pressure Range (bar or psi)}} \times 250 = \textbf{Start Pressure Value}$$

End Pressure Value

The end pressure setpoint is the pressure (bar or psi) at which the P266 control outputs the End Voltage and runs the fan motor at maximum speed. **End Pressure value** is a function of the end pressure setpoint and the total pressure range of the referenced transducer. Use the following formula to determine your application End Pressure value. See Table 3 for P266 transducer pressure ranges.

$$\frac{\textbf{End Pressure Setpoint (bar or psi)}}{\textbf{P266 Transducer Pressure Range (bar or psi)}} \times 250 = \textbf{End Pressure Value}$$

Split Winding Mode

Some single-phase PSC motors have split motor winding wire leads. Setting the Split Winding mode On enables the M2 Triac to provide voltage to the main windings (and not the auxiliary windings), which increases motor efficiency (Figure 3A and Figure 4A).

Note: Split Winding mode is available for **only 240 VAC single-phase PSC motors that have split winding wire leads**. Refer to the motor manufacturer's installation instructions to determine if your fan motor may be wired to enabled the Split Winding mode.

End Voltage Mode

End voltage is the voltage output by the P266 control (as a percentage of the full voltage) that is maintained when the monitored pressure is equal to or greater than the End Pressure. The End Voltage mode can be set to either 95% or 97% of the total input voltage.

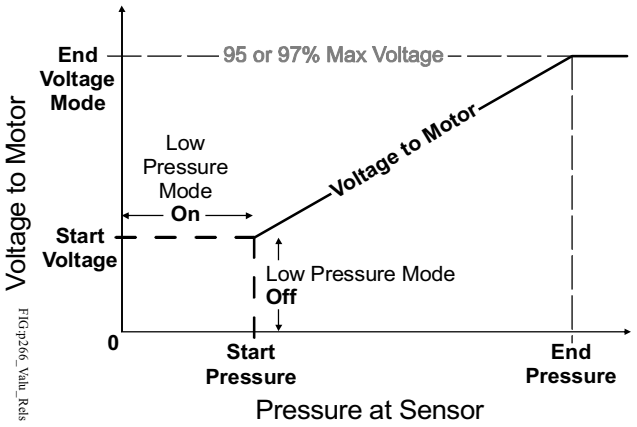

Figure 5: Graph Showing the Relationship between P266 Fan Speed Control Variables

Low-Speed Capacitor Mode

In some fan speed applications, a (user-supplied) Low-speed capacitor (LSC) can be connected to the P266 control's M3 triac and the controlled fan motor (Figure 3 and Figure 4). The low-speed capacitor is enabled at low voltages to enhance the fan motor efficiency and performance. Set Low-speed Capacitor mode On when a low-speed capacitor is used.

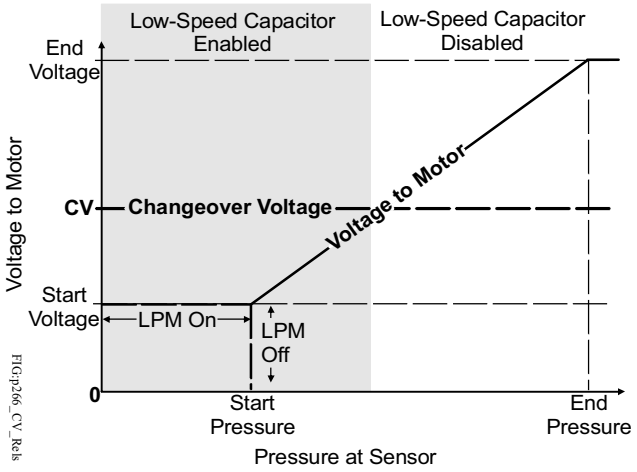

Figure 6: Low-Speed Capacitor Operation

Note: The optional low-speed capacitor should be equal in both the voltage range and the microfarad value to the auxiliary capacitor supplied by the manufacturer, but the capacitor must not exceed 15 microfarads.

Note: You must also set the Changeover Voltage value when a low-speed capacitor is used in your P266 control application. See *Changeover Voltage Value* and *Determining Changeover Voltage Value* for more information on setting the Changeover Voltage value.

Auxiliary Fan Stage Mode

You can set the P266 fan speed control to cycle (On/Off) up to three additional (fixed-speed) fan motors or fan stages in conjunction with the variable speed fan controlled by the P266 control.

Three low-voltage circuits (Figure 2) can be wired to control the auxiliary fan motor/stage starters. See Table 2 for information on setting the number of auxiliary fans used in your application.

Figure 7 shows a P266 control application with one auxiliary fan operating in conjunction with the speed-controlled fan. When the condenser load exceeds the output capacity of the speed-controlled fan, the P266 control powers On the auxiliary fan and shifts the speed-controlled (P266) fan to a new start pressure.

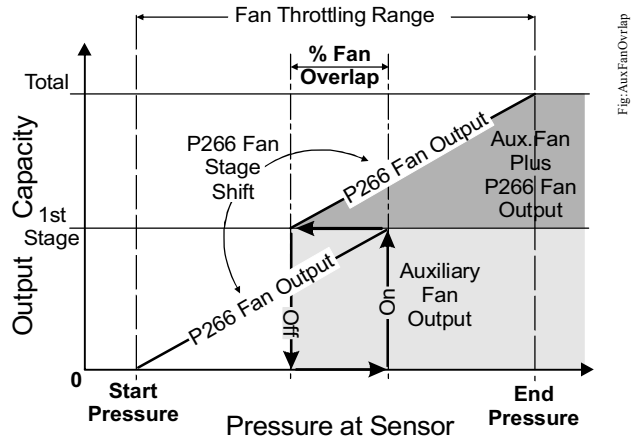

Figure 7: Graph Showing a Speed-Controlled (P266) Fan Operating with One Auxiliary (On/Off) Fan Stage over the Entire Pressure Range

Auxiliary Fan Overlap Value

Auxiliary Fan Overlap value determines the pressure range overlap (as a percentage of the total pressure [throttling] range) between the fan stages set up on the P266 control. The fan overlap value is equal for all auxiliary fan stages set up on the control.

Increasing the Auxiliary Fan Overlap value decreases the (On/Off) cycling rate of the auxiliary fans and increases the pressure differential between auxiliary fan stages (which increases the pressure range of each auxiliary fan stage).

Note: If the P266 control is set for no auxiliary fans, the Auxiliary Fan Overlap value is not used. See Table 2 for information on setting the number of auxiliary fans used in your application.

Changeover Voltage Value

The Changeover Voltage value determines the voltage at which the P266 control enables and disables the M3 triac and the low-speed capacitor (Figure 6). See *Determining Changeover Voltage Value*.

Setting Values and Modes

To change settings and values on a P266 control:

1. Determine the operating pressure setpoints (psi or bar), voltage inputs and outputs (VAC), and the other modes of operation required for your condenser fan motor control application.
2. Convert the selected pressure setpoints (psi or bar) and voltage targets (VAC) into P266 control values. See *P266 Control Values and Modes* and Table 2.
3. Position the DIP switches to set the new values and/or modes. See *Setting up the DIP Switch Block*.
4. Press and hold the push button until the number of LED flashes indicates the desired value or set of values and/or mode settings. Release the push button **after**:
   - **two flashes** to save the Low Pressure mode setting and the Start Voltage value
   - **three flashes** to save the Start Pressure value
   - **four flashes** to save the End Pressure value
   - **five flashes** to save the Split Winding, End Voltage, Low-speed Capacitor Mode, and Auxiliary Fan Stages mode settings
   - **six flashes** to save the Auxiliary Fan Overlap value
   - **seven flashes** to save the Changeover Voltage value

   Note: See Table 2 for more information about the values and modes that are associated with the number of LED flashes.
5. Repeat Steps 3 and 4 for the next value and/or mode you need to change.
6. After you save all of the new values and mode settings, set all of the DIP switches to the On position to lock out the push button operation.

Setting up the DIP Switch Block

To set new values and modes on the DIP switch block:

1. Position all of the switches on the DIP switch block to the Off position.
2. Position the numbered switches to ON so that the total of the switch numbers (in the ON position) equals the desired setup value. Start with the highest number switch that is less than the setup value. (For example, if the desired setup value is 185, position switch 128 to ON first. Then position switch 32 ON, followed by switch 16, switch 8, and switch 1 [128+32+16+8+1=185] [Figure 8]).

   Mode settings require you to position only one or two switches on the DIP switch block, depending on the mode. See Table 2 for more information about the values and modes that are associated with the number of LED flashes.

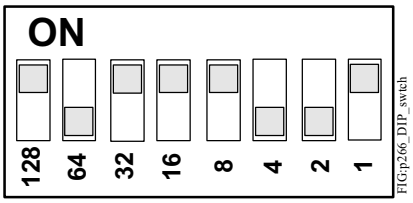

Figure 8: A DIP Switch Block with the Switches Positioned for a Setup Value of 185

IMPORTANT: All of the switches on the DIP switch block must be set to the proper positions for your application before you press and release the push button to save the values and/or mode settings. See Table 2 for more information on switch positions.

Test Voltage Mode

Test Voltage mode is a setup and diagnostic tool in the P266 control firmware that allows you to test a condenser fan motor's operation at different voltage values in the field and determine the optimal Start Voltage value for your P266 control application.

Test Voltage mode also allows you to determine and set the optimal Changeover Voltage value for the M3 triac in P266 control applications that use a low-speed capacitor.

To use the Test Voltage Mode, you need:

- a P266 control model designed for your condenser fan application
- access to the condenser (and fan motor) controlled by your P266 control
- a clamp-on ampere meter with 15 A range (to check changeover current draw when determining Changeover Voltage value)
- an insulated probe to hold down the push-button and change the DIP switch positions
- a 24 VAC Class 2 power supply (**only** for P266 control models that require an external 24 VAC power supply)
- a Low-Speed Capacitor (LSC), sized for the fan motor (**only** for P266 control applications that use a low-speed capacitor)

  Note: The LSC should be equal in both the voltage range and the microfarad value to the motor manufacturer's auxiliary capacitor, but the LSC must not exceed 15 microfarads.

Setting up Test Voltage Mode

Before you power on a P266 control and enable the Test Voltage mode on the control:

1. Read and follow the guidelines and procedures in the *Mounting* and *Wiring* sections.
2. Mount and wire the P266 control in your condenser application and observe these additional guidelines:
   - Refer to the label inside the P266 control housing cover for model-specific wiring details. See *Wiring* for some wiring options.
   - Wire the auxiliary and main windings according to the motor manufacturer's instructions and your application requirements. Split the windings (at the winding leads) and power them separately, if your application and motor allow for split-winding operation. See Figure 3 and Figure 4.

- If your application uses an optional low-speed capacitor, wire the LSC to the M3 triac and motor **only** after you have checked and recorded the current draw at maximum. See *Determining Changeover Voltage Value*.
- If your P266 control model requires an external 24 VAC power supply for control operation, wire that power supply to the control. (Refer to the wiring label inside the P266 control cover for external power supply requirements.)
- You do **not** have to connect, wire, or power the P266 transducer, or put a load on the condenser to operate a P266 control in the Test Voltage mode. Test Voltage mode allows you to use the DIP switch to set the voltage supplied to the motor by the P266 control.

3. Set up the P266 control and the condenser fan motor for the intended operation, by setting the required values and modes of operation for your condenser fan application. See *Setup and Adjustments* for procedures.

Determining Changeover Voltage Value

In the Test Voltage mode, you can determine and set the Changeover Voltage value for P266 control applications that use an optional low-voltage capacitor. To determine and set the Changeover Voltage value:

1. Mount, wire, and set up the P266 control and the condenser fan motor for operation in the Test Voltage mode. See *Setting up Test Voltage Mode*.

   Note: Do **not** wire the low-speed capacitor until Step 5 of this procedure.

2. Set all of the DIP switches except switch 1 to the ON position; set switch 1 to Off.
3. Apply line-voltage power to the P266 control (and the external 24 VAC power supply on required models), then, within the first 30 seconds after applying power, press and release the push button three times. The LED goes off and stays off, and the fan motor accelerates to maximum speed (at 95 or 97% of maximum voltage) and stays at the maximum voltage for up to 5 minutes.
4. At maximum voltage, use the clamp-on ampere meter to check the current draw (in amperes) of the fan motor auxiliary windings and record the auxiliary windings current draw for the motor at maximum voltage.
5. Disconnect line-voltage power to the P266 (and the external 24 VAC power supply on required models).
6. Wire the low-speed capacitor to the M3 triac and the motor auxiliary windings. (See Figure 3 and Figure 4 for M3 triac wiring options.)
7. Set all of the DIP switches except switches 8 and 32 to the Off position; set switches 8 and 32 to the ON position. (8 + 32 = 40% of maximum voltage value.)
8. Apply line-voltage power to the P266 control (and the external 24 VAC power supply on required models), then, within the first 30 seconds after applying power, press and release the push button three times. The LED goes off and stays off, and the fan motor accelerates to the speed at 40% of the maximum voltage (for up to 5 minutes).
9. At 40% of maximum voltage, use the clamp-on ampere meter to check the current draw (in amperes) of the low-speed capacitor lead connected to the M3 terminal and record the current draw for the low-speed capacitor lead at 40% voltage.
10. Repeat Step 7 but increase the percent voltage value by 8%, then repeat Step 8, Step 9, and Step 10 at the increased voltage values until the current draw equals the (maximum voltage) current draw recorded in Step 4.

    Note: If the motor stops or does not run smoothly, reduce the voltage value on the DIP switches by 4% and test the motor operation.

11. The DIP switch voltage value is now equal to the highest voltage of the low-speed mode or the Changeover Voltage value.
12. Press and hold the push button until the LED flashes 3 time, then release the button. The Changeover Voltage value is set and saved on the P266 control.

    Note: If you want to also determine and set the Start Voltage value for your P266 control and motor, you can go directly to Step 3 of the *Determining Start Voltage Value* procedure.

13. Disconnect power to the P266 control and set all of the DIP switches to the On position to lock out the push button operation.
14. Reconnect power to the P266 control to resume normal motor speed control.

Determining Start Voltage Value

In the Test Voltage mode, you can also determine and set the Start Voltage value on for P266 control application.

To determine and set the Start Voltage value:

1. Mount, wire, and set up the P266 control and the condenser fan motor for operation in the Test Voltage mode. See *Setting up Test Voltage Mode*.

   Note: If your application uses Split Winding mode and Low Speed Capacitor mode, wire the split windings and low-speed capacitor according to your application requirements (Figure 3A and Figure 4A).

2. Apply line-voltage power to the P266 control (and the external 24 VAC power supply on required models), then, within the first 30 seconds after applying power, press and release the push button three times. The LED goes off and stays off.

3. Position the DIP switches so that the total value of the switches positioned ON is equal to a percentage value equal to or slightly higher than your estimated Start Voltage value. (For example, if you estimate the start voltage of the motor to be 25% of the total voltage, position switches 16, 8, 4, and 2 ON. 16 + 8 + 4 + 2 = 30%, which is slightly higher than your 25% estimate.) The fan motor accelerates to the speed at 30% of maximum voltage and stays at that speed.

4. Observe the fan motor operation and determine if the applied start voltage runs the motor at the desired start speed:

   - If the start speed and motor operation meet your application requirements, go to Step 5.
   - If the start speed or operation does not meet your application requirements, return to Step 3 and set a new estimated Start Voltage value to generate the desired motor start speed.

5. When your motor is running at the desired start speed (Start Voltage value), press and hold the push button until the LED flashes 2 times in succession, then release the push button. The Start Voltage value is set and saved on the P266 control.

6. Disconnect power to the P266 control and set all of the DIP switches to the On position to lock out the push button operation.

7. Reconnect power to the P266 control to resume normal motor speed control.

Table 2: LED Flash Sequences, Setup Values, Mode Settings on DIP Switch Block and Default Values and Mode Settings Example

Release Push Button After...	Value/Mode Name (Binary Switch Number)	Value Range/Mode Settings (Example Default Settings)	Switch Number and Position Description of Value/Setting	DIP Switch Block Example Default Settings
Two Flashes	**Low Speed Mode** (Switch 128)	Settings: ON or Off (Default Setting: **Off**)	Switch 128 Off = No voltage to motor when sensed pressure is below start pressure. Switch 128 ON = Start voltage to motor when sensed pressure is at or below start pressure.	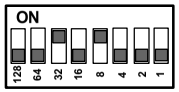
	Start Voltage Value (Switches 1 to 64)	Value Range: 10 to 90 (Default Value: **40**)	Position Switches 1 to 64 ON or Off so that the sum of the switches set to ON equals the Start Voltage Value.	
Three Flashes	**Start Pressure Value** (Switches 1 to 128)	Value Range: 10 to 230 (Default Value: **110**)	Position Switches 1 to 128 ON or Off so that the sum of the switches set to ON equals the Start Pressure Value.	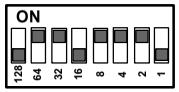
Four Flashes	**End Pressure Value** (Switches 1 to 128)	Value Range: [Start Pressure + 8] to 240 (Default Value: **129**)	Position the Switches 1 to 128 ON or Off so that the sum of the switches set to ON equals the End Pressure Value.	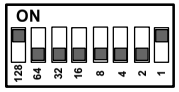
Five Flashes (Switches 64 and 128 Off)	**Split Winding Mode** (Switch 32)	Settings: ON or Off (Default Setting: **Off**)	Switch 32 ON = M2 Triac enabled to power split windings. Switch 32 Off = M2 Triac is disabled.	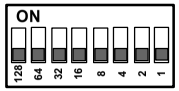
	End Voltage Mode (Switch 16)	Settings: ON or Off (Default Setting: **Off**)	Switch 16 ON = Provides 95% of P266 input voltage to motor. Switch 16 Off = Provides 97% of P266 input voltage to motor.	
	(Future Function) (Switch 8)	Settings: ON or Off (Default Setting: **Off**)	Switch 8 ON = (Do not set to ON position.) Switch 8 Off = Set switch to Off position.	
	Low Speed Capacitor Mode (Switch 4)	Settings: ON or Off (Default Setting: **Off**)	Switch 4 ON = Low speed capacitor is available. Switch 4 Off = Low speed capacitor is not available.	
	Number of Auxiliary Fan Stages (Switches 1 and 2)	Settings: ON or Off (Default Setting: **Off - Off**)	Position switches 1-Off and 2-Off for no auxiliary fans. Position switches 1-On and 2-Off for auxiliary fan 1. Position switches 1-Off and 2-On for auxiliary fans 1 and 2. Position switches 1-On and 2-On for auxiliary fan 1, 2, and 3.	
Six Flashes (Switch 128 Off)	**Auxiliary Fan Overlap** (Switches 1 to 64)	Value Range: 1 to 90 (Default Value: **10**)	Position Switches 1 to 64 ON or Off so that the sum of the switches set to ON equals the Auxiliary Fan Overlap Value.	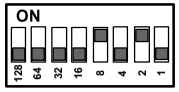
Seven Flashes (Switch 128 Off)	**Changeover Voltage Value** (Switch 1 to 64)	Value Range: 10 to 80 (Default Value: **60**)	Position Switches 1 to 64 ON or Off so that the sum of the switches set to ON equals the Changeover Voltage value.	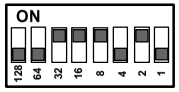

P266 Electronic Pressure Transducers

P266 controls are designed to reference either one or two Johnson Controls P266 Electronic Pressure Transducers to monitor condenser pressure.

P266 transducers are specialized versions of the P499 Series Electronic Pressure Transducers designed for use with P266 fan speed controls. See Table 3 for the available P266 transducer models.

Note: On P266 control applications that use two P266 transducers, the P266 control always references the transducer that is sensing the highest pressure.

IMPORTANT: When two P266 transducers are connected to a P266 control, the transducers must be the same model (product code number). Failure to connect the same P266 transducer models to the P266 control can result in erratic control behavior.

Refer to the *P499 Series Electronic Pressure Transducers Product/Technical Bulletin (LIT-12011190)* for information on installing P266 transducers.

Table 3: P266SNR Electronic Pressure Transducers

Product Code Number	Description
P266SNR-1C	Electronic Pressure Transducer: **0 to 35 bar (0 to 508 psi)** total range with a 1/4 in. SAE Female Flare connection and a 2 meter (3.1 ft) cable.
P266SNR-2C	Electronic Pressure Transducer: **0 to 52 bar (0 to 754 psi)** total range with a 1/4 in. SAE Female Flare connection and a 2 meter (3.1 ft) cable.

Technical Specifications

P266xxx-x

Product	P266xxx-x Single Phase Condenser Fan Speed Control
Input Supply Power	208-240 VAC 50/60 Hz or 480-575 VAC 50/60 Hz depending on model (Refer to the label inside the P266 control housing cover for rated voltage range and model-specific wiring diagram.)
Low-Voltage Power Supply	P266A and P266B Types: External 24 VAC Class 2, 20 VA Supply Transformer P266Exx Types: Low-voltage power for P266 control is provided by an onboard transformer. **Note:** When auxiliary fan starters are connected to P266E type controls, you must provide an external Safety Extra-Low Voltage (SELV) AC supply to power the fan starters (Figure 2).
Ambient Operating Conditions	**Temperature:** -20 to 60°C (-4 to 140°F) **Humidity:** Up to 95% RH non-condensing; Maximum Dew Point 29°C (85°F)
Ambient Shipping and Storage Conditions	**Temperature:** -40 to 85°C (-40 to 185°F) **Humidity:** Up to 95% RH non-condensing; Maximum Dew Point 29°C (85°F)
Low-Voltage Connections	1/4 in. Quick-Connect terminals, 30 m (100 ft) maximum wiring runs
Input Transducer	P266SNR-x Pressure Transducer: 5 VDC for 0.5 to 4.5 VDC ratio metric analog signal
Enclosure Type	NEMA 3R, IP54
Case Construction	Aluminum Die Casting
Cover Construction	UV Stabilized Polycarbonate/ABS
Dimensions (HxWxD)	159 x 177 x 70 mm (6-1/4 x 7 x 2-3/4 in.)
Weight	Heaviest Model Weight: 1.0 kg (2.2 lb) Approximate Shipping Weight: 1.2 kg (2.6 lb)
Compliance	**Europe:** Mark: CE Compliant; CENELEC EN 60947-1 & 4-2; RoHS Directive (2002/95/EC); WEEE Directive (2002/96/EC)
	North America: ETL, UL508C; cETL C22.2 No. 107.1; FCC Compliant to CFR47, Part 15, Subpart B, Class B Industry Canada (IC) Compliant to Canadian ICES-003, Class B limits
	Australia: C-Tick Compliant (N1813)

The performance specifications are nominal and conform to acceptable industry standards. For application at conditions beyond these specifications, consult Johnson Controls Application Engineering at (414) 524-5535. Johnson Controls, Inc. shall not be liable for damages resulting from misapplication or misuse of its products.

United States Emissions Compliance (FCC)

This equipment has been tested and found to comply with the limits for a Class B digital device, pursuant to Part 15 of the FCC Rules. These limits are designed to provide reasonable protection against harmful interference in a residential installation. This equipment generates, uses and can radiate radio frequency energy and, if not installed and used in accordance with the instructions, may cause harmful interference to radio communications. However, there is no guarantee that interference will not occur in a particular installation. If this equipment does cause harmful interference to radio or television reception, which can be determined by turning the equipment off and on, the user is encouraged to try to correct the interference by one or more of the following measures:

- Reorient or relocate the receiving antenna.

- Increase the separation between the equipment and receiver.

- Connect the equipment into an outlet on a circuit different from that to which the receiver is connected.

- Consult the dealer or an experienced radio/TV technician for help.

Canadian Emissions Compliance

This Class (B) digital apparatus meets all the requirements of the Canadian Interference-Causing Equipment Regulations.

Cet appareil numérique de la Classe (B) respecte toutes les exigences du Règlement sur le matériel brouilleur du Canada.

Building Efficiency
507 E. Michigan Street, Milwaukee, WI 53202

Metasys® and Johnson Controls® are registered trademarks of Johnson Controls, Inc.
All other marks herein are the marks of their respective owners. © 2009 Johnson Controls, Inc.

Published in U.S.A. www.johnsoncontrols.com

YR

Submittal

Flow Regulator & Port Section

Form No.: F001.6
Date: 5.05
Supersedes: F001.5 9.03

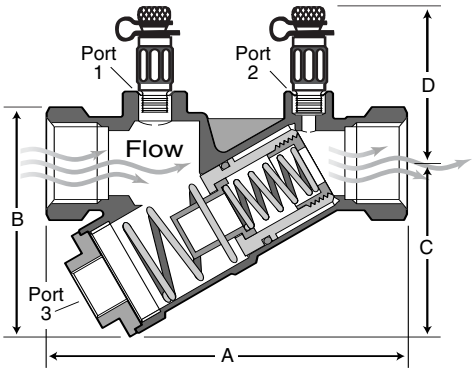

Model YR shown with standard Pressure / Temperature ports.

Product Information

Body: DZR Brass

Flow Cartridge: Series 300 Stainless Steel Wear Surfaces with Stainless Steel Spring

Accuracy: ±5%

Rating: 400 psig at 250° F (25 bar at 120° C)

AutoFlow regulator, factory set to automatically limit the flow to within 5% of the specified amount over 95% of the control range. The flow cartridge is removable from the valve body to provide access for regulator changeout, inspection and cleaning without breaking the main piping. Internal wear surfaces of the valve cartridge are stainless steel. Pressure / Temperature ports are standard.

Dimensions not to be used for construction unless prints certified by factory.

Dimensions

Model	Size in./(mm)	A in./(mm)	B in./(mm)	C in./(mm)	D in./(mm)	Weight lb./(kg)	Cv / (Kv)	Maximum gpm (lps)† Control Range psid (kPa) 2-32 (14-220)	5-60 (35-414)
YR0050S	1/2 (15)	3.7 (93)	2.3 (59)	1.9 (49)	2.2 (55)	0.9 (0.41)	7.6 (8.8)	8 (0.5)	12 (0.8)
YR0050F	1/2 (15)	4.0 (101)	2.5 (64)	1.9 (49)	2.2 (55)	0.9 (0.41)	7.6 (8.8)	8 (0.5)	12 (0.8)
YR0075S	3/4 (20)	4.1 (103)	2.5 (63)	1.9 (49)	2.2 (55)	1.0 (0.45)	8.7 (10.1)	8 (0.5)	12 (0.8)
YR0075F	3/4 (20)	4.2 (106)	2.6 (67)	1.9 (49)	2.2 (55)	1.0 (0.45)	8.7 (10.1)	8 (0.5)	12 (0.8)
YR0100S	1 (25)	5.3 (136)	3.2 (80)	2.5 (64)	2.3 (58)	1.9 (0.86)	15.3 (17.7)	18 (1.1)	26 (1.6)
YR0100F	1 (25)	5.5 (140)	3.4 (86)	2.5 (64)	2.3 (58)	1.9 (0.86)	15.3 (17.7)	18 (1.1)	26 (1.6)
YR0125F	1 1/4 (32)	5.8 (148)	3.6 (90)	2.5 (64)	3.1 (80)	2.1 (0.95)	15.2 (17.6)	18 (1.1)	26 (1.6)
YR0150F	1 1/2 (40)	7.0 (177)	5.3 (134)	4.1 (104)	2.5 (64)	4.0 (1.81)	38.7 (44.7)	50 (3.2)	70 (4.4)
YR0200F	2 (50)	7.1 (179)	5.5 (140)	4.1 (104)	2.8 (70)	6.0 (2.04)	42.1 (48.7)	50 (3.2)	70 (4.4)
YR0250F	2 1/2 (65)	9.1 (230)	7.0 (177)	5.2 (132)	2.9 (73)	9.0 (3.63)	87.2 (100.8)	80 (5.0)	120 (7.6)

S = female sweat **F** = female NPT

Notes

Weights based on F X F connections and will vary with mixed options/connections.

All weights and dimensions are subject to minor changes.

Cv's based on component body without flow regulator.

†For pump head calculations, add the indicated pressure drop of 4.6 ft (14 kPa) for 2-32 (14-220) or 11.6 ft (35 kPa) for 5-60 (35-414) to calculated drops for other components

1 1/4" - 2 1/2" available with sweat adaptor

Available in ISO7

3 ports only available

8908 Governors Row / Dallas, Texas 75247
1-800-ASK-FLOW / +1 214 631 0011
www.flowdesign.com

FDI
a division of IMI Indoor Climate

YR

Submittal
Flow Regulator & Port Section

Flow Rates

Size	psid Range	Flow Rate (gpm)
1/2" - 3/4"	2 - 32	0.5, 0.75, 1.0, 1.25, 1.5, 1.75, 2.0, 2.25, 2.5, 3.0, 3.5, 4.0, 4.5, 5.0, 6.0, 7.0, 8.0
	5 - 60	1.0, 1.5, 2.0, 2.5, 3.0, 4.0, 5.0, 6.0, 7.0, 8.0, 9.0, 10, 11, 12
1" - 1 1/4"	2 - 32	0.5, 0.75, 1.0, 1.25, 1.5, 1.75, 2.0, 2.25, 2.5, 3.0, 3.5, 4.0, 4.5, 5.0, 6.0, 7.0, 8.0, 9.0, 10, 11, 12, 13, 14, 15, 16, 17, 18
	5 - 60	1.0, 1.5, 2.0, 2.5, 3.0, 4.0, 5.0, 6.0, 7.0, 8.0, 9.0, 10, 11, 12, 13, 14, 15, 16, 17, 18, 19, 20, 21, 22, 23, 24, 25, 26
1 1/2" - 2"	2 - 32	5.0, 6.0, 7.0, 8.0, 9.0, 10, 11, 12, 13, 14, 15, 16, 17, 18, 20, 22, 24, 26, 28, 30, 32, 34, 36, 38, 40, 42, 44, 46, 48, 50
	5 - 60	8.0, 9.0, 10, 11, 12, 13, 14, 15, 16, 17, 18, 19, 20, 21, 22, 23, 24, 25, 26, 28, 30, 32, 34, 36, 38, 40, 42, 44, 46, 48, 50, 52, 54, 56, 58, 60, 62, 64, 66, 68, 70
2 1/2"	2 - 32	9.0, 10, 11, 12, 13, 14, 15, 16, 17, 18, 20, 22, 24, 26, 28, 30, 32, 34, 36, 38, 40, 42, 44, 46, 48, 50, 52, 56, 60, 64, 68, 72, 76, 80
	5 - 60	13, 14, 15, 16, 17, 18, 19, 20, 21, 22, 23, 24, 25, 26, 28, 30, 32, 34, 36, 38, 40, 42, 44, 46, 48, 50, 52, 54, 56, 58, 60, 62, 64, 66, 68, 70, 72, 76, 80, 84, 88, 92, 96, 100, 104, 108, 112, 116, 120

Size	kPa Range	Flow Rate (lps)
15 - 20 mm	14 - 220	0.03, 0.05, 0.06, 0.08, 0.09, 0.11, 0.13, 0.14, 0.16, 0.19, 0.22, 0.25, 0.28, 0.32, 0.38, 0.44, 0.50
	35 - 414	0.06, 0.09, 0.13, 0.16, 0.19, 0.25, 0.32, 0.38, 0.44, 0.50, 0.57, 0.63, 0.69, 0.76
25 - 32 mm	14 - 220	0.03, 0.05, 0.06, 0.08, 0.09, 0.11, 0.13, 0.14, 0.16, 0.19, 0.22, 0.25, 0.28, 0.32, 0.38, 0.44, 0.50, 0.57, 0.63, 0.69, 0.76, 0.82, 0.88, 0.95, 1.01, 1.07, 1.14
	35 - 414	0.06, 0.09, 0.13, 0.16, 0.19, 0.25, 0.32, 0.38, 0.44, 0.50, 0.57, 0.63, 0.69, 0.76, 0.82, 0.88, 0.95, 1.01, 1.07, 1.14, 1.20, 1.26, 1.32, 1.39, 1.45, 1.51, 1.58, 1.64
40 - 50 mm	14 - 220	0.32, 0.38, 0.44, 0.50, 0.57, 0.63, 0.69, 0.76, 0.82, 0.88, 0.95, 1.01, 1.07, 1.14, 1.26, 1.39, 1.51, 1.64, 1.77, 1.89, 2.02, 2.15, 2.27, 2.40, 2.52, 2.65, 2.78, 2.90, 3.03, 3.15
	35 - 414	0.50, 0.57, 0.63, 0.69, 0.76, 0.82, 0.88, 0.95, 1.01, 1.07, 1.14, 1.20, 1.26, 1.32, 1.39, 1.45, 1.51, 1.58, 1.64, 1.77, 1.90, 2.02, 2.15, 2.27, 2.40, 2.52, 2.65, 2.78, 2.90 3.03, 3.15, 3.28, 3.41, 3.53, 3.66, 3.79, 3.91, 4.04, 4.16, 4.29, 4.42
65 mm	14 - 220	0.57, 0.63, 0.69, 0.76, 0.82, 0.88, 0.95, 1.01, 1.07, 1.14, 1.26, 1.39, 1.51, 1.64, 1.77, 1.89, 2.02, 2.15, 2.27, 2.40, 2.52, 2.65, 2.78, 2.90, 3.03, 3.15, 3.28, 3.53, 3.79, 4.04, 4.29, 4.54, 4.79, 5.05
	35 - 414	0.82, 0.88, 0.95, 1.01, 1.07, 1.14, 1.20, 1.26, 1.32, 1.39, 1.45, 1.51, 1.58, 1.64, 1.77, 1.89, 2.02, 2.15, 2.27, 2.40, 2.52, 2.65, 2.78, 2.90, 3.03 3.15, 3.28, 3.41, 3.53, 3.66, 3.79, 3.91, 4.04, 4.16, 4.29, 4.42, 4.54, 4.79, 5.05, 5.30, 5.55, 5.80, 6.06, 6.31, 6.56, 6.81, 7.07, 7.32, 7.57

Model Order Designation

Model / Size
1" Sweat YR Shown

Options w/ Locations
Use for options that require specified locations.
Dual P/T's in Ports 1 & 2 Shown

GPM
12 gpm Shown

YR0100S - S / 3/4S - DP1&2 - MI - 12

Connections
Inlet side first. See specifications for available connections.
Female Sweat X 3/4" Reduced Female Sweat Shown

Options
Use for options that have specific locations.
Metal ID Tag Shown

S = female sweat **F** = female NPT **M** = male NPT

Options Available

AV Manual Air Vent
DN Dielectric Nipple
HN Hose End Drain
MI Metal ID Tag
PI Plastic ID Tag
PT Pressure / Tempreture Ports
PL Plug
SE Stem Extender
SN Standard Nipple
XL Ext. P/T Port

Various convenience fittings are available.

8908 Governors Row / Dallas, Texas 75247
1-800-ASK-FLOW / +1 214 631 0011
www.flowdesign.com

AutoFlow Control Valves

Installation, Operation and Maintenance

Models AC, MC, WB, WG, WR, WS, WT, YR

Form No.: F113.3
Date: 8.06
Supersedes: F113.2 11.98

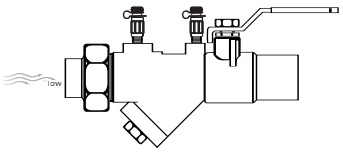

Model AC

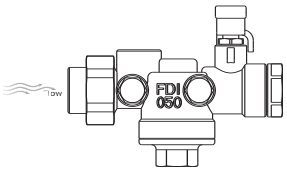

Model MC

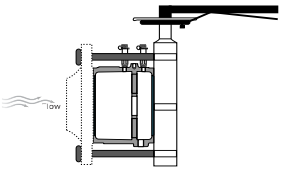

Model WB

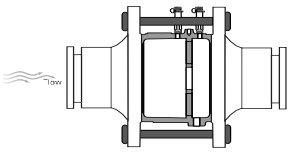

Model WG

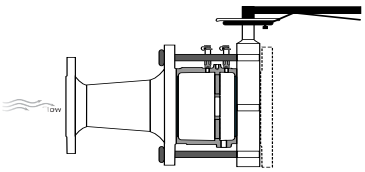

Model WR

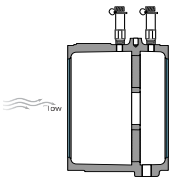

Model WS

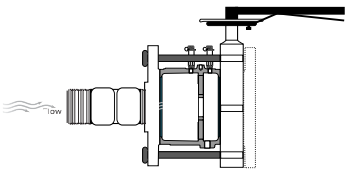

Model WT

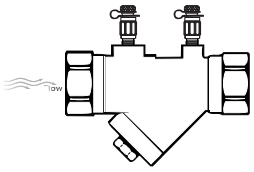

Model YR

Descriptions

Model AC
1/2” - 2”
- AutoFlow regulator • Ball valve
- Port section • Union • Directional flow
- Dual P/T ports • SWT or FPT (ball end) by SWT, FPT or MPT (union end) One reduction size available on union end - 1/2” - 2” SWT, FPT or MPT

Model MC
1/2” - 3/4”
- AutoFlow regulator • Ball valve • Union
- Four accessory port locations • Pressure / Temperature ports are standard

Model WB
2” - 8”
- Model WS or WU flow control valve with rods, nuts and Model BF butterfly valve.
- 4” - 8” models have spacer flanges between valves • Shipped unassembled.
- Does not include mating flange.

Model WG
2 1/2” - 14”
- AutoFlow regulator • Grooved Ends
- Directional flow • Steel / Iron
- Dual P/T ports

Model WR
3” - 6”
- AutoFlow regulator and butterfly valve with reduced inlet flange designed to mate with flanged ATC valve • Shipped assembled • Dual P/T ports • Directional flow

Model WS
2 1/2” - 30”
- AutoFlow regulator • Ductile iron wafer body (150# or 300#) • Directional flow
- Dual P/T ports • Wafer style • Shipped with rods & nuts for use with customer-supplied companion flanges
- 16” - 30” models have fabricated-steel wafer body for 150# ASA flanges

Model WT
2 1/2” - 4”
- AutoFlow regulator and butterfly valve with reduced threaded inlet designed to mate with threaded brass ATC
- Dielectric fitting included • Directional flow
- Dual P/T ports • Shipped assembled

Model YR
1/2” - 2 1/2”
- AutoFlow regulator • Port section
- Directional flow • Dual P/T ports
- Brass body • 1/2” - 1” SWT X SWT or FPT X FPT; 1 1/4” - 2 1/2” FPT X FPT SWT X SWT available for 1 1/4” - 2” with addition of brass sweat adapters

Flow Design Inc. / 8908 Governors Row / Dallas, Texas 75247
1-800-ASK-FLOW / +1 214 631 0011
www.flowdesign.com

A division of IMI Indoor Climate

FDI
FLOW DESIGN INC

Model Designation Example:

Model / Size
1" Low Flow AC Shown

Options w/ Locations
Use for options that require specified locations.
Dual P/T's in Ports 2 & 4 and Air Vent in Port 1 Shown

GPM
12 GPM Shown

ACL100 - FS / 3/4FS - DP2&4, AV1 - MI - 12

Connections
Ball valve end first. See specifications for available connections.
Female Sweat X 3/4" Reduced Female Sweat Shown

Options
Use for options that have specific locations.
Metal ID Tag Shown

[**L** = low flow range (2-32) **H** = high flow range (5-60)]
OR
1 (2-32), **2** (5-60), **3** (3-20), **4** (5-40), **5** (7-45)
G = grooved **FS** = female sweat **MS** = male sweat **FT** = female thread **MT** = male thread

Options Available

AA Automatic Air Vent
AV Manual Air Vent
DX Dual XL P/T Ports (in lieu of std. ports)
EH Extended Handle with Memory Stop
HN Hose End Drain Valve
PI Plastic Tag
PL Plug
SE Stem Extender
T4 1/4" Accessory Port

Installation

- There are no minimum straight-piping requirements for the inlet or the outlet.
- Valves may be installed in horizontal or vertical lines. The vertical flow can be up or down.
- The flow arrow on the valve body must be pointing in the direction of flow.
- Avoid placing the valve close to a pump discharge. Allow 10' before the valve if possible.
- The model number gives the following information: body style, line size, end connections, P/T ports, GPM flow settings.

Flange and Groove Body Products
Most flange products are not furnished with flange gaskets or bolts, and unless specified otherwise have 150# raised-face flanges. Standard installation techniques covering flanged products should be followed. All products have a flow direction arrow. Care must be taken to locate the valve so that the arrow is pointed in the direction of the flow.

Grooved end products are to be installed using a "Victaulic-style coupling". The same installation techniques used to install standard "Victaulic" products should be followed. Care must be taken to assure the flow direction arrow is in the proper location.

8908 Governors Row / Dallas, Texas 75247
1-800-ASK-FLOW / +1 214 631 0011
www.flowdesign.com

Installation *(continued)*

Wafer Body Valves (Model WB, WG, WR, WS, WT)

1. Make sure the long bolts and nuts to secure the wafer body are included with the valve.
2. Install the wafer body between 150# or 300# flanges making sure the flow arrow is in the direction of flow.
3. Make sure the inside diameter of the customer-supplied gaskets does not interfere with the flow.
4. The pressure or P/T ports should be vertical up. These ports can be used to vent air from each side of the body after filling and start-up.

Operation

General

Flow control valves are purchased for a specific GPM flow rate and are equipped with a spring-loaded piston to maintain that flow rate. Five spring ranges are available for AutoFlow valves. The first number is the differential pressure (psi) needed to achieve the GPM rating. The second number is the maximum D.P. where the rated GPM will be maintained. The model number will show the spring range of the product.

Example:

Model XX (-)

(-) can be L = 2-32, H = 5-60 or 1 (2-32), 2 (5-60), 3 (3-20), 4 (5-40), 5 (7-45)

Verifying Flow

The flow can be verified by measuring the DP (differential pressure) across the valve using the portsprovided. If it measures between 2-32 (or other) the flow is usually in the specified flow range. Debris plugging one of the flow ports will cause the DP to read high, so make sure the unit is clean when verifying flow. There are several ways to measure DP:

a. A pressure gauge with a P/T adapter can measure the pressure on each side of the valve. The differences between these readings is the DP.

b. A differential pressure gauge can simultaneously measure from each port and read the DP directly.

Using a Strainer

A Y-strainer is recommended to prevent clogging. A 40-mesh screen is recommended for flows 1.5 GPM or less.

Accuracy

Accuracy is rated at 5% of the specified flow rate. Accuracy will vary with the temperature of the incoming fluid and specific gravity of the fluid. Rated flow rates are suitable for glycol solutions up to 50 percent.

Air Purge

AutoFlow valves will not work properly if air is trapped in the housing. Models with wafer bodies will always have a small amount of air because its body is higher than the top of the pipe. Air can cause a clicking noise in some valves.

Air can easily be vented using the pressure or PT ports. On small valves, 2” and under, the upstream port can be used. On larger steel valves, both ports should be purged because air can reside on both sides of the mid-plate. A simple way to purge air with PT ports is to use a 1/4” manual air vent (Model AV) with a long gauge adapter (Model GA30).

Maintenance

- There is no maintenance required on Flow Control valves.
- If inlet strainers are used they should be inspected and cleaned after start-up and every six months thereafter.
- The controlled flow rate can be changed in the field, on 1/2” - 2 1/2” AC, KY & YR Models, by replacing the cartridge assembly in the control valve. This requires removing the cartridge from the controller. Specific instructions for making the change come with new cartridge assemblies. The change takes only 5 to 15 minutes with ordinary tools. Changing cartridges on larger valves should be done at the factory.

Call for an RMA number before returning equipment to the factory.

See next page for Troubleshooting information

Troubleshooting Guide

Possible Cause	Possible Solution
• PROBLEM: Low Water Flow	
1) Strainer clogged	1) Back-flush or manually clean the coil strainer.
2) Wrong location	2) Make sure the valve is in the proper location with the correct GPM.
3) Low system pressure	3) If possible, check the pressure at the hook-up supply and return valves. The drop through the coil and ATC valve may be too large for the available head.
4) Balance valve plugged	4) The AutoFlow valve may have debris. Remove cartridge, clean and replace.
5) ATC valve port closed or wrong Cv	5) Make sure the ATC is wide open and has proper Cv.
6) System valve is partially closed	6) Open all manual system valves.
• PROBLEM: High Water Flow	
1) Wrong location	1) Make sure the valve is in the proper location with the correct GPM.
2) System pressure too high	2) Check the differential pressure across the AutoFlow valve. If larger then 32 psi, close the return-side ball valve until the difference is less then 32 psi. The spring range on the cartridge could be changed to 5-60 psi which will also solve the problem.
3) AutoFlow valve backward	3) Check the flow arrow and reverse valve if necessary.
• PROBLEM: Noise or Vibration	
1) AutoFlow valve clicking or noisy	a) Check the Delta P across the AutoFlow valve. If at or near the maximum, it may be necessary to replace the cartridge with a different spring range.
	b) Make sure the air is purged from the system. Air can cause a clicking noise. WS valves require air purging on each side of the mid-plate.
	c) Two AutoFlow valves close coupled in series can cause pulsing.

8908 Governors Row / Dallas, Texas 75247
1-800-ASK-FLOW / +1 214 631 0011
www.flowdesign.com

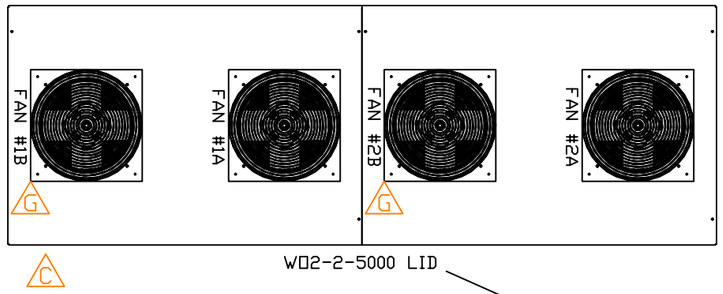

W02-2-5000 LID

36" SERVICE CLEARANCE ON REAR SIDE OF CHILLER UNIT

36" SERVICE CLEARANCE IN FRONT OF ELECTRICAL ENCLOSURE

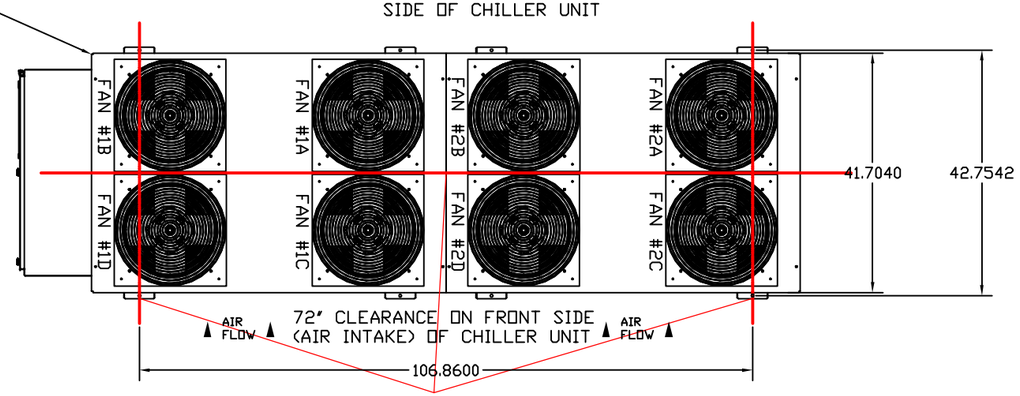

72" CLEARANCE ON FRONT SIDE (AIR INTAKE) OF CHILLER UNIT

LIFT MACHINE USING STRAPS THROUGH OUTSIDE FEET. BE SURE TO USE SPREADER BAR.

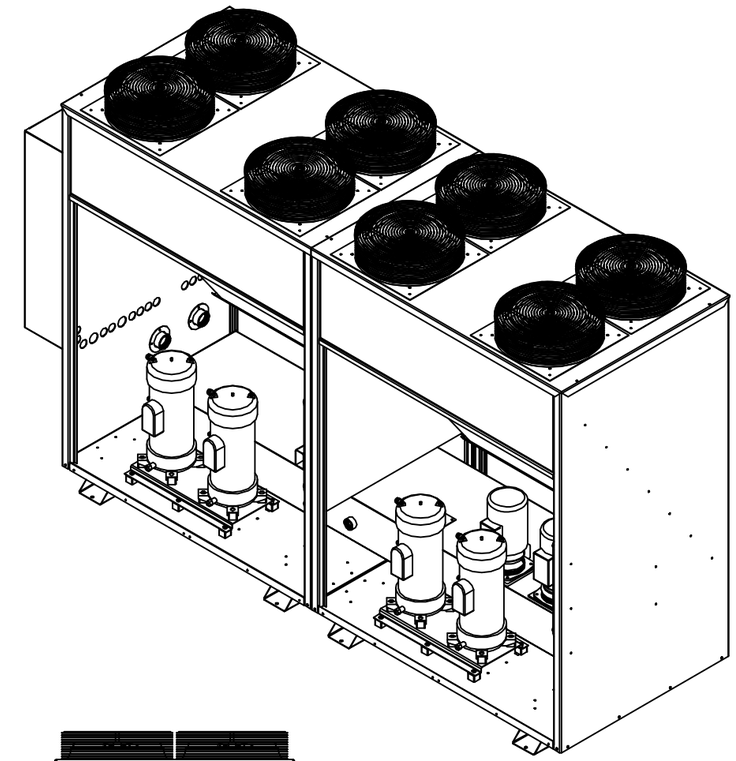

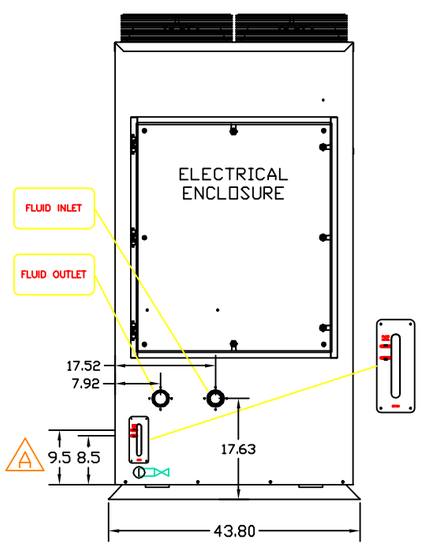

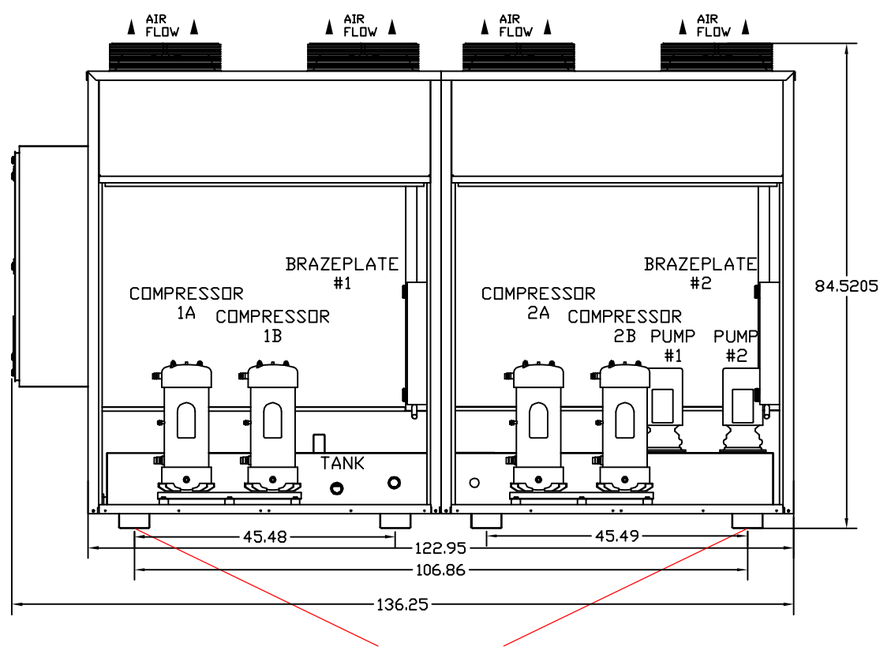

LIFT MACHINE USING STRAPS THROUGH OUTSIDE FEET. BE SURE TO USE SPREADER BAR.

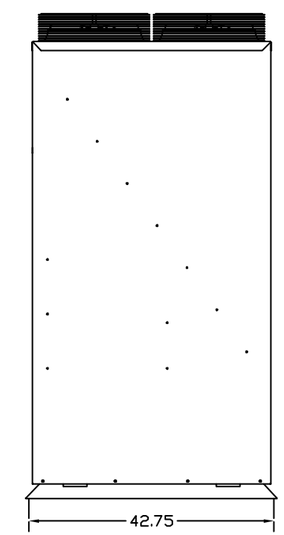

W02-2-7500 UNIT HAS (8) FANS
W02-2-5000 UNIT HAS (4) FANS

ALL DIMENSIONS ARE IN INCHES

THIS PRINT CONTAINS INFORMATION PROPRIETARY TO KOOLANT KOOLERS. MAY NOT BE DUPLICATED, REPRODUCED, OR SHARED IN ANY WAY WITHOUT THE EXPRESSED WRITTEN CONSENT OF KOOLANT KOOLERS.

CONFIDENTIAL AND PROPRIETARY

DATE	DESCRIPTION OF REVISION	APPROVED BY
04/20/10	CHANGED 5T LID LABELING	CJH <G>
03/16/10	UPDATED TITLE BLOCK	MAR <F>
03/11/10	REMOVE 'CHILLER' FROM TAGS	MAR <E>
03/02/10	SWITCHED FAN #'S A&C, B&D	MAR <D>
02/18/10	ADDED W02-2-5000 LID	MAR <C>
02/18/10	MOVE SIGHT GLASS INSIDE UNIT	MAR <B>
2/10/10	ADDED TAGGING AND SIGHT GLASS	MAR <A>

KOOLANT KOOLERS

Dimplex Thermal Solutions

SCHREIBER CHILLERS

DESIGN BY: MAR
DATE: 01/22/10
DRAWN BY: MAR
PAGE 1 OF 1

KALAMAZOO, MI.
PH (800) 968-5665
WWW.DIMPLEXTHERMAL.COM

W02-5000/7500-2P

LAYOUT

DRAWING NO. 443378

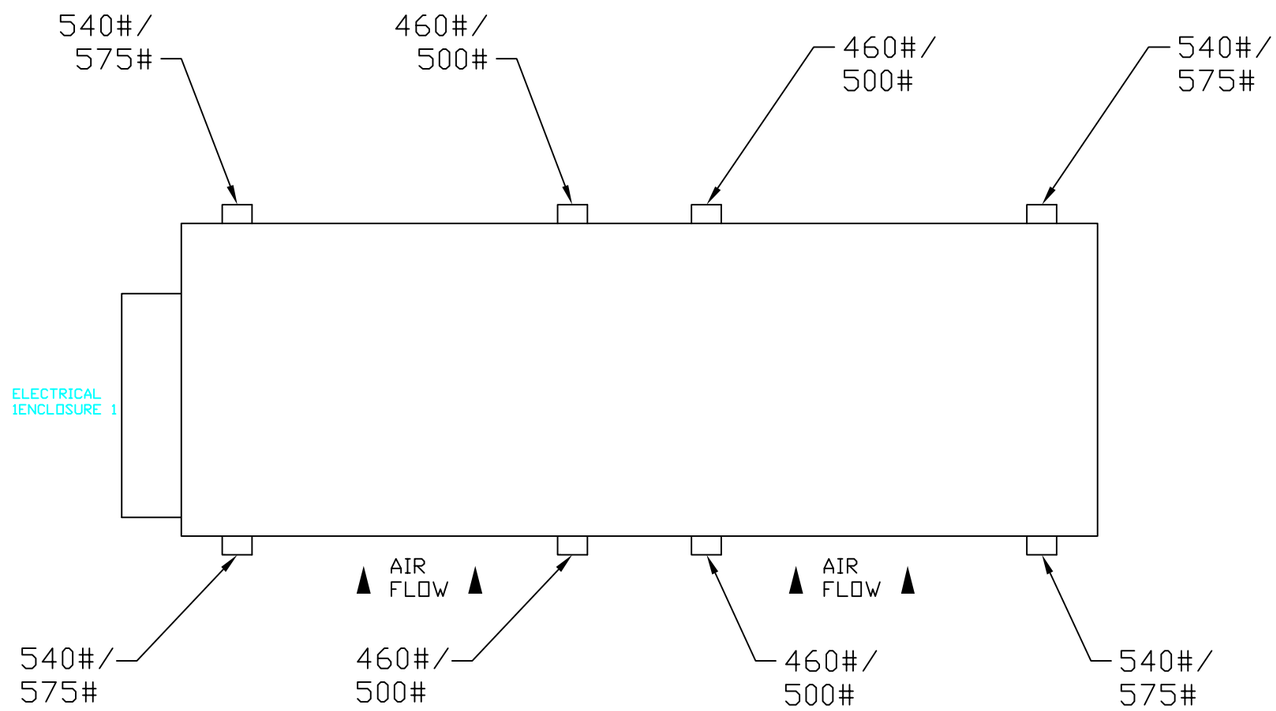

WEIGHT FOR 5000 MODEL/
WEIGHT FOR 7500 MODEL

ALL DIMENSIONS ARE IN INCHES

THIS PRINT CONTAINS INFORMATION PROPRIETARY TO DIMPLEX THERMAL SOLUTIONS. MAY NOT BE DUPLICATED, REPRODUCED, OR SHARED IN ANY WAY WITHOUT THE EXPRESSED WRITTEN CONSENT OF DIMPLEX THERMAL SOLUTIONSS.

CONFIDENTIAL AND PROPRIETARY

DATE	DESCRIPTION OF REVISION	APPROVED BY

KOOLANT KOOLERS

Dimplex Thermal Solutions

SCHREIBER CHILLERS

DESIGN BY: DHM | DRAWN BY: DHM | KALAMAZOO, MI.
DATE: 04/02/10 | PAGE 1 OF 1 | PH (800) 968-5665
WWW.DIMPLEXTHERMAL.COM

W02-2-5000/7500

WEIGHT DISTRIBUTION

DRAWING NO. 444511

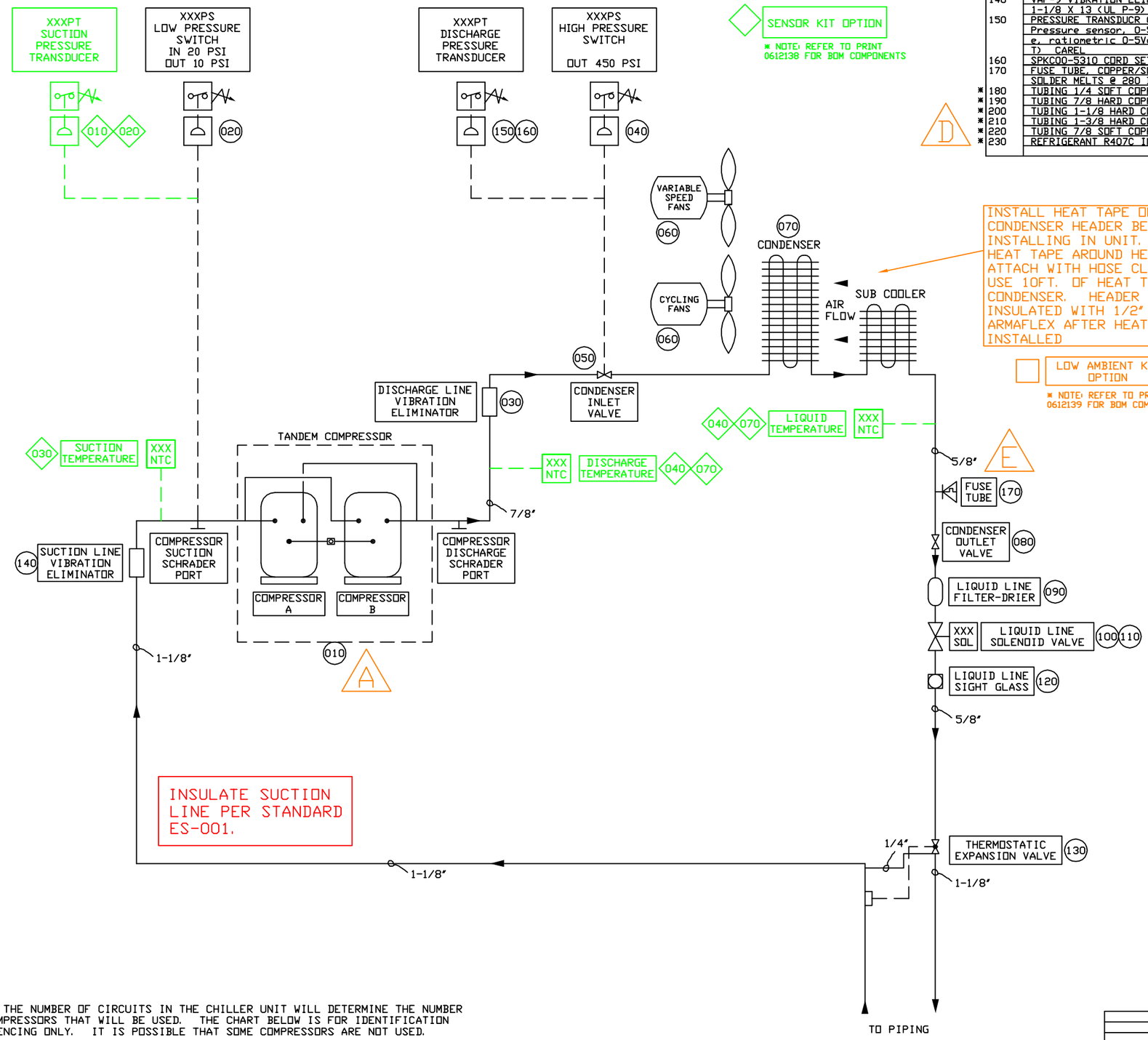

NO.	ID/DESCRIPTION	K.K.PART#	QTY	TYPE
140	VAF-9 VIBRATION ELIMINATOR 1-1/8 1-1/8 X 13 (UL P-9) PACKLESS	2980009	1.0	PC
150	PRESSURE TRANSDUCR CAREL SPKT0033R0 Pressure sensor, 0-500 psi relativ e, ratiometric 0-5Vdc (0.5 -4.5 VDL T) CAREL	4807739	1.0	PC
160	SPKC00-5310 CORD SET CAREL 14-1/2'	4807715	1.0	PC
170	FUSE TUBE, COPPER/SOLDER SOLDER MELTS @ 280 DEG F	7399201	1.0	PC
* 180	TUBING 1/4 SOFT COPPER REFRIG.	7302000	2.0	PC
* 190	TUBING 7/8 HARD COPPER ACR	7307010	5.0	PC
* 200	TUBING 1-1/8 HARD COPPER ACR	7309010	5.0	PC
* 210	TUBING 1-3/8 HARD COPPER ACR	7311010	6.0	PC
* 220	TUBING 7/8 SOFT COPPER REFRIG.	7307005	4.0	PC
* 230	REFRIGERANT R407C IN A 115LB CYL	2990030	22.5	PC

NO.	ID/DESCRIPTION	K.K.PART#	QTY	TYPE
001	WO(-)-2-7500-L-M REFR 460V	0443467		ASSEM
010	GE 15T 460/3/60 PKG	0612153	1.0	ASSEM
010	COMPRESSOR 7.5 TON 460/3/60 R-407C	0612003	2.0	ASSEM
* 010	C-SCN603H8K COMP 7.5 460/3/60 407C 440/460. INCLUDES MOUNTING KIT. COMPRESSOR CODE #809 183 88. USED WITH R407C. HAS PVE OIL SANYO	1450077	1.0	PC
* 020	018-0095-05 CRANKCASE HEATER FITS ZR18-81 480 VAC, 70 WATTS 48 LEADS. COPELAND (11/06/09: OLD PAR T NUMBER 018-0072-05)	1298032	1.0	PC
* 020	SA-14S SIGHT GLASS 1/2 ODF SPORLAN	2720003	1.0	PC
* 030	COUPLING 3/4 RIGID CONDUIT	3807156	8.0	PC
* 040	PV10-10R-D TERMINAL RING INSULATED 500/PKG PANDUIT	3802015	8.0	PC
* 050	SCREW 5/16-18 X 2-1/2 HEX HEAD CAP	7720250	14.0	PC
* 060	WASHER 5/16 LOCK	7725222	14.0	PC
* 070	WASHER 5/16 FLAT	7725111	24.0	PC
* 080	NUT 5/16-18 HEX NYLON INSERT LOCK	7714013	8.0	PC
* 090	NUT 5/16-18 "J" CAGENUT 10 PACK	7714022	6.0	PC
020	LOW PRESSURE SWITCH 10/20 SWITCH 10/20 CUT IN 20 PSI, CUT OU T 10 PSI CAN BE USED AS LP FOR 134 A, FORMERLY 10/32 SWITCH, JOHNSON CONTROLS: P100AP-201C(P100AA-1); RE SOURCE DISTRIBUTION YK-03L 0110-010 E020E	3640006	1.0	PC
030	VAF-8 VIBRATION ELIMINATOR 7/8 7/8 X 11-1/2 (UL P-8) PACKLESS	2980008	1.0	PC
040	SWITCH HIGH PRESSURE 450 MANUAL VENDOR PART NUMBER: YK-03H 0110-45 OR350Z(MR) ENCAPSULATED WITH A 9 FO OT CORD, OPENS HIGH, MANUAL RESET, OPENS 450 PSI, 407C/404A HP SWITCH, RESOURCE DISTRIBUTION	3640017	1.0	PC
050	VALVE ANGLE REFRIG 7/8 WITH ACCESS PORT	3980003	1.0	PC
060	FAN ASSEMBLY 16"-5/8 1PH OUTDOOR 1 PHASE WEATHER PROOF MOTOR WITH 5 /8 KEYED SHAFT, V-SPEED APPLICATION 1.2 FLA@460V	0608585	4.0	ASSEM
* 010	048A170F1H MOTOR 1/2 HP 1PH.5/8 KEY ED SHAFT, SEALED ON SHAFT, 48 FRAM E END, TEFC, 60 DEG C; 1625 RPM SAM PLE MODEL #SW48A170F1A, CAT # T339A ; 60 HZ: 1/2 HP 1625 RPM 230/460/1, 2.4A/1.2A 50 HZ: 1/3 HP 1425 RPM 19 0-230/380/1 MARATHON (6/08 OLD # 04 8A170F1B CHANGE REV LEVEL) 5/12/20 10 208V HAS BEEN ADDED TO NAME PLAT E.	4051311	1.0	PC
* 020	61146601 FAN BLADE 16 5/8 KEY ED HUB CW F Y - 5/8 30 DEG O N DISCHARGE 3/16 KEY WAY LAU For 1/2" hub use adapter 4500052	4500036	1.0	PC
* 030	FAN GUARD MOUNT 16 DWG #101513 1.5 INCH TALL RENFRO FRANKLIN	4507016	1.0	PC
* 040	FAN GUARD FULL 16 DWG #101514 4.5 INCH TALL RENFRO FRANKLIN	4507017	1.0	PC
* 050	VENTURI 16 GALVANIZED DWG #201676 18 GA MEMPHIS METAL	4504162	1.0	PC
* 060	ANAEROBIC THRD LOCKER (VIBRA-TITE) 10 ML PURPLE	9803000	0.1	PC
* 070	CAP 5/8 DIA X 1-1/2 VINYL (100 PER PKG)	4021315	1.0	PC
* 080	SILICONE SEALANT CLEAR	4508976	0.1	PC
* 090	C5-A 51007 ANTI-SEIZE COPPER BASED, IN 1 LB CANS FEL-PRO	4021324	0.1	PC
* 100	BL50 LOCKNUT 1/2 TIGER GRIP STEEL APPLETON	3800600	2.0	PC
* 110	CG-5050S CORD STRAIN RELIEF 0.500-0.625 CABLE 1/2 ST HUB APPL ETON	3800471	2.0	PC
* 120	WIRE 14/3 SOW/SOOW 600V BLACK 1000' REEL	3807095	10.0	PC
070	COIL 20 TON REMOTE HEADER (.50) HEADER IS MOUNTED ON SHEET METAL A ND CONNECTED TO COIL WITH "L" TUBES ****.50 CLEARANCE HOLES*** 470# SK IDED WEIGHT	1413086	1.0	PC
080	VALVE ANGLE REFRIG 5/8 WITH ACCESS PORT	3980002	1.0	PC
090	C-305S FILTER DRIER 5/8" SPORLAN	2730005	1.0	PC
100	E14S250 VALVE SOLENOID 5/8" REQUIRES MKC-2E COIL SPORLAN	2710008	1.0	PC
110	MKC-2E 24VAC 50-60 HZ COIL ASSEMBLY	0608319	1.0	ASSEM
* 010	MKC-2E SOLENOID COIL 24V AC 50/60HZ ASSEMBLY WITH CABLE IS 0608319 SPO RLAN	2710113	1.0	PC
* 020	12205 CONNECTOR: DIN 43650 18MM W/ 5 METER GRAY PVC CABLE AC/DC 0-230 V 18 GA WIRE, UL RECOGNIZED E172930 MURRELEKTRONIK NEW PART NUMBER 7000-18081-2160500	4807100	1.0	PC
120	SA-15S SIGHT GLASS 5/8 ODF SPORLAN	2720004	1.0	PC
130	DNE-15-C VALVE EXPANSION	2760112	1.0	PC

* PARTS NOT SHOWN ON DRAWING DETAIL

NOTE: THE NUMBER OF CIRCUITS IN THE CHILLER UNIT WILL DETERMINE THE NUMBER OF COMPRESSORS THAT WILL BE USED. THE CHART BELOW IS FOR IDENTIFICATION REFERENCING ONLY. IT IS POSSIBLE THAT SOME COMPRESSORS ARE NOT USED.

COMPONENT IDENTIFICATION

COMPRESSOR	HIGH PRESSURE SWITCH	DISCHARGE TRANSDUCER	DISCHARGE TEMPERATURE	LIQUID LINE TEMPERATURE	LOW PRESSURE SWITCH	SUCTION TRANSDUCER	SUCTION TEMPERATURE	LIQUID LINE SOLENOID
1A & 1B	715PS	710PT	708NTC	753NTC	752PS	711PT	709NTC	738SOL
2A & 2B	815PS	810PT	808NTC	853NTC	852PS	811PT	809NTC	838SOL
3A & 3B	915PS	910PT	908NTC	953NTC	952PS	911PT	909NTC	938SOL
4A & 4B	1015PS	1010PT	1008NTC	1053NTC	1052PS	1011PT	1009NTC	1038SOL

ALL DIMENSIONS ARE IN INCHES

THIS PRINT CONTAINS INFORMATION PROPRIETARY TO DIMPLEX THERMAL SOLUTIONS. MAY NOT BE DUPLICATED, REPRODUCED, OR SHARED IN ANY WAY WITHOUT THE EXPRESSED WRITTEN CONSENT OF DIMPLEX THERMAL SOLUTIONS.

CONFIDENTIAL AND PROPRIETARY

DATE	DESCRIPTION OF REVISION	APPROVED BY
05/02/11	ADD FUSE PLUG TUBE 7399201	MAR (E)1690
10/25/10	ADD 7/8 SOFT COPPER	MAB (D)
08/07/10	CHG COIL FROM 1413072	MAR (C)
03/08/10	UPDATE REFRIG LBS FROM 25	MAR (B)
02/15/10	CHANGED FROM 0611770	CJH (A)

KOOLANT KOOLERS

Dimplex Thermal Solutions

SCHREIBER CHILLERS

DESIGN BY: MAR | DRAWN BY: MAR | KALAMAZOO, MI. PH (800) 968-5665 WWW.DIMPLEXTHERMAL.COM

DATE: 01/07/10 | PAGE 1 OF 1

WO()-2-7500-()P-M

REFRIGERATION

DRAWING NO. 443467

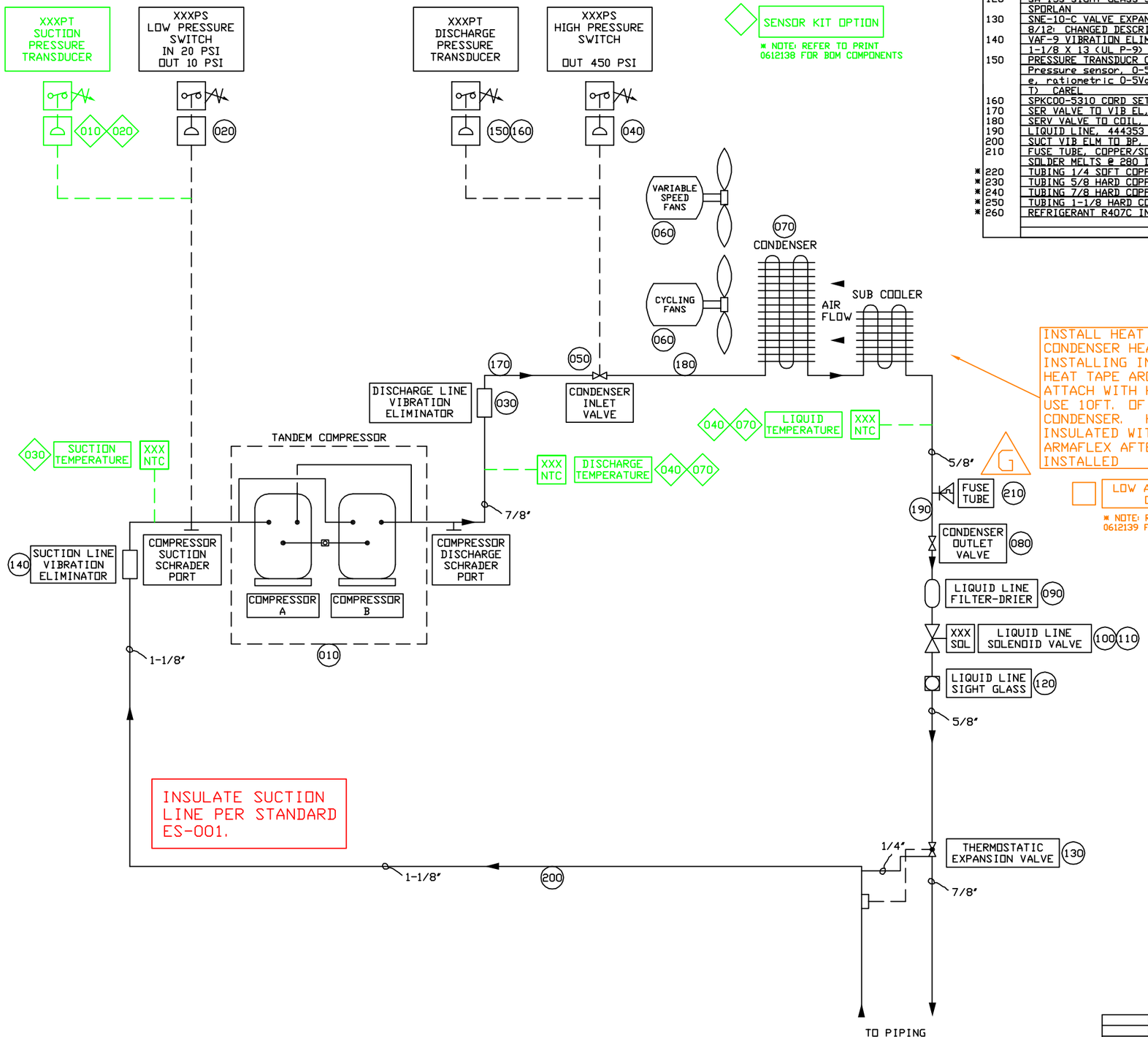

NO.	ID/DESCRIPTION	K.K. PART#	QTY	TYPE
120	SA-15S SIGHT GLASS 5/8 ODF SPORLAN	2720004	1.0	PC
130	SNE-10-C VALVE EXPANSION 8/12; CHANGED DESCRIPTION SVE-10-C	2760105	1.0	PC
140	VAF-9 VIBRATION ELIMINATOR 1-1/8 1-1/8 X 13 (UL P-9) PACKLESS	2980009	1.0	PC
150	PRESSURE TRANSDUCR CAREL SPKT0033R0 Pressure sensor, 0-500 psi relativ e, ratiometric 0-5Vdc (0.5 -4.5 VDL T) CAREL	4807739	1.0	PC
160	SPKC00-5310 CORD SET CAREL 14-1/2'	4807715	1.0	PC
170	SER VALVE TO VIB EL, 0443763	7399215	1.0	PC
180	SERV VALVE TO COIL, 0443766	7399212	1.0	PC
190	LIQUID LINE, 444353	7399223	1.0	PC
200	SUCT VIB ELM TO BP, 0443765	7399213	1.0	PC
210	FUSE TUBE, COPPER/SOLDER SOLDER MELTS @ 280 DEG F	7399201	1.0	PC
* 220	TUBING 1/4 SOFT COPPER REFRIG.	7302000	2.0	PC
* 230	TUBING 5/8 HARD COPPER ACR	7305010	5.0	PC
* 240	TUBING 7/8 HARD COPPER ACR	7307010	5.0	PC
* 250	TUBING 1-1/8 HARD COPPER ACR	7309010	6.0	PC
* 260	REFRIGERANT R407C IN A 115LB CYL	2990030	22.5	PC

NO.	ID/DESCRIPTION	K.K. PART#	QTY	TYPE
001	WO2-2-5000-2P-NF-L-M-407C REFRIG 460/3/60	0443569		
ASSEM				
010	10T (2) 460/3/60 PKG	0612141	1.0	ASSEM
* 010	COMPRESSOR 5 TON 460/3/60 R-407C	0612002	2.0	ASSEM
010	C-SBN453HBG COM 5 460/3/60 407C 440/460; INCLUDES MOUNTING KIT; COMPRESSOR CODE #809 966 88. USED WITH R407C. HAS PVE OIL SANYO	1450064	1.0	PC
* 020	018-0095-05 CRANKCASE HEATER FITS ZR18-81 480 VAC. 70 WATTS 48 LEADS; COPELAND (11/06/09: OLD PAR T NUMBER 018-0072-05)	1298032	1.0	PC
* 020	SA-14S SIGHT GLASS 1/2 ODF SPORLAN	2720003	1.0	PC
* 030	COUPLING 3/4 RIGID CONDUIT	3807156	8.0	PC
* 040	PV10-10R-D TERMINAL RING INSULATED 500/PKG PANDUIT	3802015	8.0	PC
* 050	SCREW 5/16-18 X 2-1/2 HEX HEAD CAP	7720250	14.0	PC
* 060	WASHER 5/16 LOCK	7725222	14.0	PC
* 070	WASHER 5/16 FLAT	7725111	24.0	PC
* 080	NUT 5/16-18 HEX NYLON INSERT LOCK	7714013	8.0	PC
* 110	W-4047 TEE 5/8 X 5/8 X 7/8 C	7305402	1.0	PC
* 120	W-10145 COUPLING 5/8 C X C STAKED-STOP	7305190	2.0	PC
* 130	W-4031 TEE 7/8 C X C X C	7307390	1.0	PC
* 140	SUCTION COMP 1A, 0443954	7399221	1.0	PC
* 150	SUCTION COMP 1B, 0443955	7399222	1.0	PC
* 160	TUBING 7/8 SOFT COPPER REFRIG.	7307005	3.0	PC
020	LOW PRESSURE SWITCH 10/20 SWITCH 10/20 CUT IN 20 PSI, CUT OU T 10 PSI CAN BE USED AS LP FOR 134 A, FORMERLY 10/32 SWITCH. JOHNSON CONTROLS: P100AP-201C(P100AA-1); RE SOURCE DISTRIBUTION YK-03L 0110-010 E020E	3640006	1.0	PC
030	VAF-8 VIBRATION ELIMINATOR 7/8 7/8 X 11-1/2 (UL P-8) PACKLESS	2980008	1.0	PC
040	SWITCH HIGH PRESSURE 450 MANUAL VENDOR PART NUMBER: YK-03H 0110-45 OR350Z(MR) ENCAPSULATED WITH A 9 FO OT CORD, OPENS HIGH, MANUAL RESET, OPENS 450 PSI. 407C/404A HP SWITCH. RESOURCE DISTRIBUTION	3640017	1.0	PC
050	VALVE ANGLE REFRIG 7/8 WITH ACCESS PORT	3980003	1.0	PC
060	FAN ASSEMBLY 18"-5/8 1PH OUTDOOR 1 PHASE WEATHER PROOF MOTOR WITH 5 /8 KEYED SHAFT V-SPEED APPLICATION	0608586	2.0	ASSEM
* 010	048A170F1H MOTOR 1/2 HP 1PH,5/8 KEY ED SHAFT, SEALED ON SHAFT, 48 FRAM E END, TEFC, 60 DEG C; 1625 RPM SAM PLE MODEL #SW48A170F1A, CAT # T339A ; 60 HZ: 1/2 HP 1625 RPM 230/460/1, 2.4A/1.2A 50 HZ: 1/3 HP 1425 RPM 19 0-230/380/1 MARATHON (6/08 OLD # 04 8A170F1B CHANGE REV LEVEL) 5/12/20 10 208V HAS BEEN ADDED TO NAME PLAT E.	4051311	1.0	PC
* 020	61142601 FAN BLADE 18 5/8 KEY ED HUB 28 DEG CW F08Y18-1828 5/8 ON DISCHARGE 3/16 KEY WAY LAU Fo r 1/2" hub use adapter 4500052	4500035	1.0	PC
* 030	FAN GUARD MOUNT 18 DWG #101515 1.5 INCH TALL RENFRO FRANKLIN	4507018	1.0	PC
* 040	FAN GUARD FULL 18 DWG #101516 4.5 INCH TALL RENFRO FRANKLIN	4507019	1.0	PC
* 050	VENTURI 18 GALVANIZED DWG #201678 18 GA MEMPHIS METAL	4504182	1.0	PC
* 060	CAP 5/8 DIA X 1-1/2 VINYL (100 PER PKG)	4021315	1.0	PC
* 070	ANAEROBIC THRD LOCKER (VIBRA-TITE) 10 ML PURPLE	9803000	0.1	PC
* 080	SILICONE SEALANT CLEAR	4508976	0.1	PC
* 090	C5-A 51007 ANTI-SEIZE COPPER BASED, IN 1 LB CANS FEL-PRO	4021324	0.1	PC
* 100	BL50 LOCKNUT 1/2 TIGER GRIP STEEL APPLETON	3800600	2.0	PC
* 110	CG-5050S CORD STRAIN RELIEF 0.500-0.625 CABLE 1/2 ST HUB APPL ETON	3800471	2.0	PC
* 120	WIRE 14/3 SOW/SOOW 600V BLACK 1000' REEL	3807095	5.0	PC
070	COIL 20 TON REMOTE HEADER (.50) HEADER IS MOUNTED ON SHEET METAL A ND CONNECTED TO COIL WITH "L" TUBES ****.50 CLEARANCE HOLES*** 470# SK IDED WEIGHT	1413086	1.0	PC
080	VALVE ANGLE REFRIG 5/8 WITH ACCESS PORT	3980002	1.0	PC
090	C-165S FILTER DRIER 5/8" SPORLAN	2730006	1.0	PC
100	E10S250 VALVE SOLENOID 5/8" REQUIRES MKC-2E COIL SPORLAN	2710006	1.0	PC
110	MKC-2E 24VAC 50-60 HZ COIL ASSEMBLY	0608319	1.0	ASSEM
* 010	MKC-2E SOLENOID COIL 24V AC 50/60HZ ASSEMBLY WITH CABLE IS 0608319 SPO RLAN	2710113	1.0	PC
* 020	12205 CONNECTOR: DIN 43650 18MM W/	4807100	1.0	PC

* PARTS NOT SHOWN ON DRAWING DETAIL

ALL DIMENSIONS ARE IN INCHES

THIS PRINT CONTAINS INFORMATION PROPRIETARY TO DIMPLEX THERMAL SOLUTIONS. MAY NOT BE DUPLICATED, REPRODUCED, OR SHARED IN ANY WAY WITHOUT THE EXPRESSED WRITTEN CONSENT OF DIMPLEX THERMAL SOLUTIONS.

CONFIDENTIAL AND PROPRIETARY

DATE	DESCRIPTION OF REVISION	APPROVED BY
05/02/11	ADD FUSE PLUG TUBE 7399201	MAR <G>1690
12/14/10	RMV PREBENT DISCHARGE ADD COPPER	MAB <F>
9/10/10	CHG COIL 1413072 TO 1413086	MAB <E>
05/06/10	ADDED PRE-BENT LINES	MAR <D>
03/16/10	UPDATED DESCRIPTION	MAR <C>
03/08/10	CHANGE REFRIG LBS FROM 25	MAR <B>
02/15/10	CHANGED COIL ASSEMBLY TO 24V	CJH <A>

KOOLANT KOOLERS

Dimplex Thermal Solutions

SCHREIBER CHILLERS

DESIGN BY: MAR | DRAWN BY: CJH | KALAMAZOO, MI. PH (800) 968-5665 WWW.DIMPLEXTHERMAL.COM

DATE: 1/14/10 | PAGE 1 OF 1

WO()-2-5,000-()P-M

REFRIGERATION

DRAWING NO. 443569

COMPONENT IDENTIFICATION

COMPRESSOR	HIGH PRESSURE SWITCH	DISCHARGE TRANSDUCER	DISCHARGE TEMPERATURE	LIQUID LINE TEMPERATURE	LOW PRESSURE SWITCH	SUCTION TRANSDUCER	SUCTION TEMPERATURE	LIQUID LINE SOLENOID
1A & 1B	715PS	710PT	708NTC	753NTC	752PS	711PT	709NTC	738SOL
2A & 2B	815PS	810PT	808NTC	853NTC	852PS	811PT	809NTC	838SOL
3A & 3B	915PS	910PT	908NTC	953NTC	952PS	911PT	909NTC	938SOL
4A & 4B	1015PS	1010PT	1008NTC	1053NTC	1052PS	1011PT	1009NTC	1038SOL

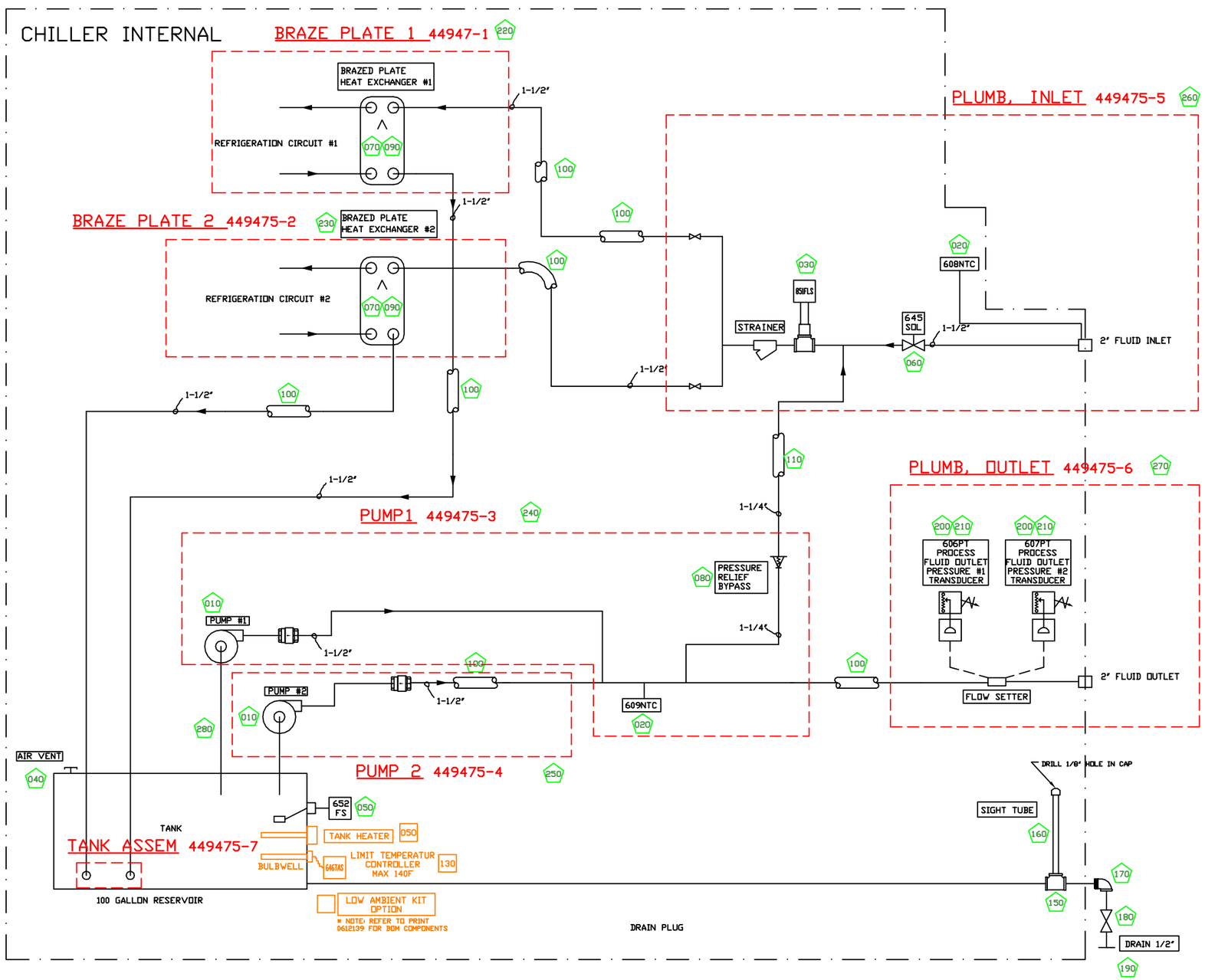

NOTE:
INSULATE TO ES-001 STANDARDS FOR LOW TEMP APPLICATION, PER 44°F SETPOINT FOR (-L) UNITS.

NOTE:
ALL INTERCONNECTING PLUMBING TO BE RUN IN NON-FERROUS MATERIAL. OTHERWISE CONTACT ENGINEERING. BOM COMPONENTS EXCLUDED.

USE FOAM TAPE FOR PLUMBING INSULATION. DO NOT USE CORK TAPE.

ARMAFLEX REQUIRED ON ANY EXPOSED HOSE.

NO.	ID/DESCRIPTION	K. K. PART#	QTY	TYPE
001	HW02-5000-2P-NF-L-M	0449489		ASSEM
010	TPHK8T6-5S PUMP VERTICAL STAINLESS	1785007	2.0	PC
020	1/2 SENSOR ASSEMBLY FOR CAREL	0611318	2.0	ASSEM
* 010	MP0617671 10K THERMISTOR 10' CAREL	4801215	1.0	PC
* 020	COMPRESSION FITTING 1/2 NPT X 3/16	7504920	1.0	PC
030	F61MB-1C SWITCH FLOW	3653015	1.0	PC
040	PMB-05-10 AIR VENT 3/8" FENNER	4100003	1.0	PC
050	L-21N-11A-1-B FLOAT SWITCH	3896113	1.0	PC
060	8210G056 VALVE SOLENOID 1.5" 24VAC	4804232	1.0	PC
070	K205*30C BRAZED PLATE H/E 12 TON	2200512	2.0	PC
080	VALVE BACK PRESS 1-1/4" 35-100 PSI	4189076	1.0	PC
090	BP INSULATION FOR K205*30C 2200512	0441282	2.0	ASSEM
* 010	BP INSULATION FOR K205 FRONT	0441227-1	1.0	PC
* 020	BP INSULATION FOR 2200512 MIDDLE	0441282-2	1.0	PC
* 030	BP INSULATION FOR K205 BACK	0441227-3	1.0	PC
100	HOSE 1-1/2 RED WINGFOOT 250 PSI	4410004	22.0	PC
	569-025-381			
110	HOSE 1-1/4 RED WINGFOOT 250 PSI	4410003	6.0	PC
	GOODYEAR # 569-025-318			
130	GASKET PUMP RISER W02-2-500-2P	9800902	4.0	PC
140	PUMP RISER 1/2 WALRUS TPHK8T	9800919	2.0	PC
150	BUSHING 1 MPT X 1/2 FPT BRS	7508600	1.0	PC
160	KK 1" SIGHT GLASS NON-FERROUS	7400004	1.0	ASSEM
* 010	PIPE 1 PVC CLEAR	7408800	1.1	PC
* 020	TEE 1 FPT X 1 FPT X 1 FPT BRS	7508105	1.0	PC
* 030	ADAPTER 1 MPT X 1 SLIP MALE PVC40	7408701	1.0	PC
* 040	NIPPLE 1 MPT X 3 BRS	7508003	1.0	PC
* 050	CAP 1 PVC40	7408900	1.0	PC
* 060	PLUG 1 MPT BRS	7508900	1.0	PC
170	ELBOW 90 1/2 MPT X 1/2 FPT BRASS	7504302	1.0	PC
180	BD-1 VALVE BOILER DRAIN 1/2	4123051	1.0	PC
190	CAP 3/4 NATIONAL HOSE BRASS	7506504	1.0	PC
200	PRESSURE TRANSDUCR CAREL SPKT0013R0	4807736	2.0	PC
210	SPKC00-5310 CORD SET CAREL 14-1/2'	4807715	2.0	PC
220	GE MEDICAL PLUMB - BRAZE PLATE 1	0449475-1	1.0	ASSEM
* 010	COUPLING 1-1/2 X 1-1/2 FPT BRASS	7516200	1.0	PC
* 020	ELBOW 45 1-1/2 FPT X 1-1/2 FPT BRS	7512302	1.0	PC
* 030	HOSEBARB 1-1/2 MPT X 1-1/2 HOSE BRS	7512901	2.0	PC
230	GE MEDICAL PLUMB 2 - BRAZE PLATE 2	0449475-2	1.0	ASSEM
* 010	COUPLING 1-1/2 X 1-1/2 FPT BRASS	7516200	2.0	PC
* 020	HOSEBARB 1-1/2 MPT X 1-1/2 HOSE BRS	7512901	2.0	PC
240	GE MEDICAL PLUMB 3 - PUMP 1	0449475-3	1.0	ASSEM
* 010	NIPPLE 1-1/4 MPT X 2-1/2 BRS	7510002	1.0	PC
* 020	BUSHING 1-1/2 MPT X 1-1/4 FPT BRS	7512605	1.0	PC
* 030	600 VALVE CHECK FLUID 1-1/2 BRONZE	4153151	1.0	PC
* 040	NIPPLE 1-1/2 MPT X 2-1/2 BRS	7512002	1.0	PC
* 050	TEE 1-1/2 X 1-1/2 X 1-1/2 FPT BRS	7512100	1.0	PC
* 060	NIPPLE 1-1/2 MPT X 5 BRS	7512008	1.0	PC
* 070	HOSEBARB 1-1/2 MPT X 1-1/2 HOSE BRS	7512901	2.0	PC
* 080	TEE 1-1/2 X 1-1/2 X 1-1/4 FPT BRS	7512103	1.0	PC
* 090	COMPRESSION FITTING 1/8 NPT X 3/16	7501910	1.0	PC
* 100	HOSEBARB 1-1/4 MPT X 1-1/4 HOSE BRS	7510910	1.0	PC
250	GE MEDICAL PLUMB 4 - PUMP 2	0449475-4	1.0	ASSEM
* 010	NIPPLE 1-1/4 MPT X 2-1/2 BRS	7510002	1.0	PC
* 020	BUSHING 1-1/2 MPT X 1-1/4 FPT BRS	7512605	1.0	PC
* 030	600 VALVE CHECK FLUID 1-1/2 BRONZE	4153151	1.0	PC
* 040	NIPPLE 1-1/2 MPT X 2-1/2 BRS	7512002	1.0	PC
* 050	ELBOW 90 1-1/2 FPT X 1-1/2 FPT BRS	7512301	1.0	PC
* 060	HOSEBARB 1-1/2 MPT X 1-1/2 HOSE BRS	7512901	1.0	PC
260	GE MEDICAL PLUMB 5 - INLET	0449475-5	1.0	ASSEM
* 010	HOSEBARB 1-1/2 MPT X 1-1/2 HOSE BRS	7512901	2.0	PC
* 020	VALVE BALL BRONZE 1-1/2	4113150	2.0	PC
* 030	NIPPLE 1-1/2 MPT X CLOSE BRS	7512000	4.0	PC
* 040	ELBOW 45 1-1/2 FPT X 1-1/2 FPT BRS	7512302	1.0	PC
* 050	NIPPLE 1-1/2 MPT X 2 BRS	7512001	1.0	PC
* 060	TEE 1-1/2 X 1-1/2 X 1-1/2 FPT BRS	7512100	1.0	PC
* 070	777SI-1 1/2 Y-STRAINER FILT BRONZE	4353014	1.0	PC
* 080	NIPPLE 1-1/2 MPT X 8 BRS	7512009	2.0	PC
* 090	TEE 1-1/2 X 1-1/2 X 1 FPT BRS	7512102	1.0	PC
* 100	TEE 1-1/2 X 1-1/2 X 1-1/4 FPT BRS	7512103	1.0	PC
* 110	NIPPLE 1-1/2 MPT X 5 BRS	7512008	1.0	PC
* 120	BUSHING 2 MPT X 1-1/2 FPT BRASS	7516601	1.0	PC
* 130	NIPPLE 1-1/4 MPT X 2-1/2 BRS	7510002	1.0	PC
* 140	ELBOW 90 1-1/4 MPT X 1-1/4 FPT BRS	7510301	1.0	PC
* 150	HOSEBARB 1-1/4 MPT X 1-1/4 HOSE BRS	7510910	1.0	PC
* 160	COMPRESSION FITTING 1/8 NPT X 3/16	7501910	1.0	PC
* 170	COUPLING 2 FPT SS FULL 304	7216201	1.0	PC
270	GE MEDICAL PLUMB 6 - OUTLET	0449475-6	1.0	ASSEM
* 010	HOSEBARB 1-1/2 MPT X 1-1/2 HOSE BRS	7512901	1.0	PC
* 020	BUSHING 2 MPT X 1-1/2 FPT BRASS	7516601	1.0	PC
* 030	A31484 VALVE PURGE 1/4 MPT X 5/16OD	7502952	2.0	PC
* 040	YR0200-FT/FT, 36 GPM FLOW SETTER	4100076	1.0	PC
* 050	NIPPLE 2 MPT X 2-1/2 BRS	7516002	1.0	PC
* 060	COUPLING 2 FPT SS FULL 304	7216201	1.0	PC
280	GE MEDICAL PLUMB 7 - TANK	0449475-7	1.0	ASSEM
* 010	HOSEBARB 1-1/2 MPT X 1-1/2 HOSE BRS	7512901	2.0	PC
* 020	ELBOW 45 1-1/2 FPT X 1-1/2 FPT BRS	7512302	1.0	PC
* 030	NIPPLE 1-1/2 MPT X CLOSE BRS	7512000	1.0	PC
* 040	ELBOW 90 1-1/2 MPT X FPT BRS	7512300	1.0	PC
290	GE TANK INSULATION	0444331	1.0	ASSEM
* 010	TANK INSULATION (GE) SIDE PLAIN	4449013	1.0	PC
* 020	TANK INSULATION (GE) SIDE CUT OUTS	4449014	1.0	PC
* 030	TANK INSULATION (GE) BOTTOM	4449015	1.0	PC
* 040	TANK INSULATION (GE) END PLAIN	4449016	1.0	PC
* 050	TANK INSULATION (GE) END CUT OUT	4449017	1.0	PC

* PARTS NOT SHOWN ON DRAWING DETAIL

ALL DIMENSIONS ARE IN INCHES

THIS PRINT CONTAINS INFORMATION PROPRIETARY TO DIMPLEX THERMAL SOLUTIONS. MAY NOT BE DUPLICATED, REPRODUCED, OR SHARED IN ANY WAY WITHOUT THE EXPRESSED WRITTEN CONSENT OF DIMPLEX THERMAL SOLUTIONSS.

CONFIDENTIAL AND PROPRIETARY

DATE	DESCRIPTION OF REVISION	APPROVED BY

KOOLANT KOOLERS

Dimplex Thermal Solutions

SCHREIBER CHILLERS

DESIGN BY: MAR | DRAWN BY: MAR | KALAMAZOO, MI. PH (800) 968-5665 WWW.DIMPLEXTHERMAL.COM

DATE: 05/02/11 | PAGE 1 OF 1

W02-2-5000-2P-L-M

PLUMBING

DRAWING NO. 449489

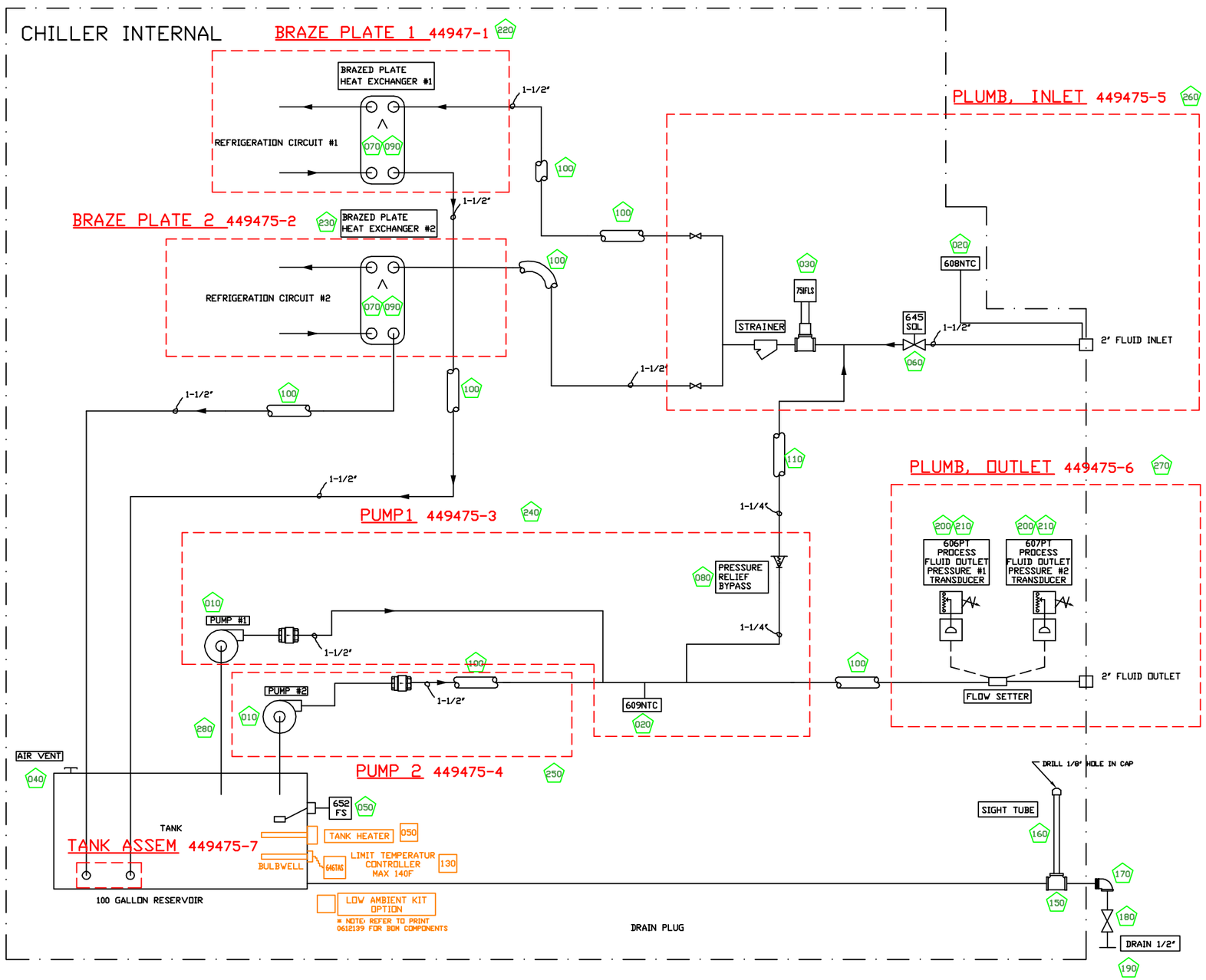

NOTE:
INSULATE TO ES-001 STANDARDS FOR LOW TEMP APPLICATION, PER 44°F SETPOINT FOR (-L) UNITS.

NOTE:
ALL INTERCONNECTING PLUMBING TO BE RUN IN NON-FERROUS MATERIAL. OTHERWISE CONTACT ENGINEERING. BOM COMPONENTS EXCLUDED.

USE FOAM TAPE FOR PLUMBING INSULATION. DO NOT USE CORK TAPE.

ARMAFLEX REQUIRED ON ANY EXPOSED HOSE.

NO.	ID/DESCRIPTION	K. K. PART#	QTY	TYPE
001	HW02-2-7500-2P-NF-L-M	0449666		ASSEM
010	TPHK8T6-5S PUMP VERTICAL STAINLESS	1785007	2.0	PC
020	1/2 SENSOR ASSEMBLY FOR CAREL	0611318	2.0	ASSEM
* 010	MP0617671 10K THERMISTOR 10' CAREL	4801215	1.0	PC
* 020	COMPRESSION FITTING 1/2 NPT X 3/16	7504920	1.0	PC
030	F61MB-1C SWITCH FLOW	3653015	1.0	PC
040	PMB-05-10 AIR VENT 3/8" FENNER	4100003	1.0	PC
050	L-21N-11A-1-B FLOAT SWITCH	3896113	1.0	PC
060	8210G056 VALVE SOLENOID 1.5" 24VAC	4804232	1.0	PC
070	K205*40C BRAZED PLATE H/E 15 TON	2200515	2.0	PC
080	VALVE BACK PRESS 1-1/4" 35-100 PSI	4189076	1.0	PC
090	BP INSULATION FOR K205*40C 2200515	0441227	2.0	ASSEM
* 010	BP INSULATION FOR K205 FRONT	0441227-1	1.0	PC
* 020	BP INSULATION FOR 2200515 MIDDLE	0441227-2	1.0	PC
* 030	BP INSULATION FOR K205 BACK	0441227-3	1.0	PC
100	HOSE 1-1/2 RED WINGFOOT 250 PSI	4410004	22.0	PC
	569-025-381			
110	HOSE 1-1/4 RED WINGFOOT 250 PSI	4410003	6.0	PC
	GOODYEAR # 569-025-318			
130	GASKET PUMP RISER W02-2-500-2P	9800902	4.0	PC
140	PUMP RISER 1/2 WALRUS TPHK8T	9800919	2.0	PC
150	BUSHING 1 MPT X 1/2 FPT BRS	7508600	1.0	PC
160	KK 1" SIGHT GLASS NON-FERROUS	7400004	1.0	ASSEM
* 010	PIPE 1 PVC CLEAR	7408800	1.1	PC
* 020	TEE 1 FPT X 1 FPT X 1 FPT BRS	7508105	1.0	PC
* 030	ADAPTER 1 MPT X 1 SLIP MALE PVC40	7408701	1.0	PC
* 040	NIPPLE 1 MPT X 3 BRS	7508003	1.0	PC
* 050	CAP 1 PVC40	7408900	1.0	PC
* 060	PLUG 1 MPT BRS	7508900	1.0	PC
170	ELBOW 90 1/2 MPT X 1/2 FPT BRASS	7504302	1.0	PC
180	BD-1 VALVE BOILER DRAIN 1/2	4123051	1.0	PC
190	CAP 3/4 NATIONAL HOSE BRASS	7506504	1.0	PC
200	PRESSURE TRANSDUCR CAREL SPKT0013R0	4807736	2.0	PC
210	SPKC00-5310 CORD SET CAREL 14-1/2'	4807715	2.0	PC
220	GE MEDICAL PLUMB - BRAZE PLATE 1	0449475-1	1.0	ASSEM
* 010	COUPLING 1-1/2 X 1-1/2 FPT BRASS	7516200	1.0	PC
* 020	ELBOW 45 1-1/2 FPT X 1-1/2 FPT BRS	7512302	1.0	PC
* 030	HOSEBARB 1-1/2 MPT X 1-1/2 HOSE BRS	7512901	2.0	PC
230	GE MEDICAL PLUMB 2 - BRAZE PLATE 2	0449475-2	1.0	ASSEM
* 010	COUPLING 1-1/2 X 1-1/2 FPT BRASS	7516200	2.0	PC
* 020	HOSEBARB 1-1/2 MPT X 1-1/2 HOSE BRS	7512901	2.0	PC
240	GE MEDICAL PLUMB 3 - PUMP 1	0449475-3	1.0	ASSEM
* 010	NIPPLE 1-1/4 MPT X 2-1/2 BRS	7510002	1.0	PC
* 020	BUSHING 1-1/2 MPT X 1-1/4 FPT BRS	7512605	1.0	PC
* 030	600 VALVE CHECK FLUID 1-1/2 BRONZE	4153151	1.0	PC
* 040	NIPPLE 1-1/2 MPT X 2-1/2 BRS	7512002	1.0	PC
* 050	TEE 1-1/2 X 1-1/2 X 1-1/2 FPT BRS	7512100	1.0	PC
* 060	NIPPLE 1-1/2 MPT X 5 BRS	7512008	1.0	PC
* 070	HOSEBARB 1-1/2 MPT X 1-1/2 HOSE BRS	7512901	2.0	PC
* 080	TEE 1-1/2 X 1-1/2 X 1-1/4 FPT BRS	7512103	1.0	PC
* 090	COMPRESSION FITTING 1/8 NPT X 3/16	7501910	1.0	PC
* 100	HOSEBARB 1-1/4 MPT X 1-1/4 HOSE BRS	7510910	1.0	PC
250	GE MEDICAL PLUMB 4 - PUMP 2	0449475-4	1.0	ASSEM
* 010	NIPPLE 1-1/4 MPT X 2-1/2 BRS	7510002	1.0	PC
* 020	BUSHING 1-1/2 MPT X 1-1/4 FPT BRS	7512605	1.0	PC
* 030	600 VALVE CHECK FLUID 1-1/2 BRONZE	4153151	1.0	PC
* 040	NIPPLE 1-1/2 MPT X 2-1/2 BRS	7512002	1.0	PC
* 050	ELBOW 90 1-1/2 FPT X 1-1/2 FPT BRS	7512301	1.0	PC
* 060	HOSEBARB 1-1/2 MPT X 1-1/2 HOSE BRS	7512901	1.0	PC
260	GE MEDICAL PLUMB 5 - INLET	0449475-5	1.0	ASSEM
* 010	HOSEBARB 1-1/2 MPT X 1-1/2 HOSE BRS	7512901	2.0	PC
* 020	VALVE BALL BRONZE 1-1/2	4113150	2.0	PC
* 030	NIPPLE 1-1/2 MPT X CLOSE BRS	7512000	4.0	PC
* 040	ELBOW 45 1-1/2 FPT X 1-1/2 FPT BRS	7512302	1.0	PC
* 050	NIPPLE 1-1/2 MPT X 2 BRS	7512001	1.0	PC
* 060	TEE 1-1/2 X 1-1/2 X 1-1/2 FPT BRS	7512100	1.0	PC
* 070	777S1-1 1/2 Y-STRAINER FILT BRONZE	4353014	1.0	PC
* 080	NIPPLE 1-1/2 MPT X 8 BRS	7512009	2.0	PC
* 090	TEE 1-1/2 X 1-1/2 X 1 FPT BRS	7512102	1.0	PC
* 100	TEE 1-1/2 X 1-1/2 X 1-1/4 FPT BRS	7512103	1.0	PC
* 110	NIPPLE 1-1/2 MPT X 5 BRS	7512008	1.0	PC
* 120	BUSHING 2 MPT X 1-1/2 FPT BRASS	7516601	1.0	PC
* 130	NIPPLE 1-1/4 MPT X 2-1/2 BRS	7510002	1.0	PC
* 140	ELBOW 90 1-1/4 MPT X 1-1/4 FPT BRS	7510301	1.0	PC
* 150	HOSEBARB 1-1/4 MPT X 1-1/4 HOSE BRS	7510910	1.0	PC
* 160	COMPRESSION FITTING 1/8 NPT X 3/16	7501910	1.0	PC
* 170	COUPLING 2 FPT SS FULL 304	7216201	1.0	PC
270	GE MEDICAL PLUMB 6 - OUTLET	0449475-6	1.0	ASSEM
* 010	HOSEBARB 1-1/2 MPT X 1-1/2 HOSE BRS	7512901	1.0	PC
* 020	BUSHING 2 MPT X 1-1/2 FPT BRASS	7516601	1.0	PC
* 030	A31484 VALVE PURGE 1/4 MPT X 5/16OD	7502952	2.0	PC
* 040	YR0200-FT/FT, 36 GPM FLOW SETTER	4100076	1.0	PC
* 050	NIPPLE 2 MPT X 2-1/2 BRS	7516002	1.0	PC
* 060	COUPLING 2 FPT SS FULL 304	7216201	1.0	PC
280	GE MEDICAL PLUMB 7 - TANK	0449475-7	1.0	ASSEM
* 010	HOSEBARB 1-1/2 MPT X 1-1/2 HOSE BRS	7512901	2.0	PC
* 020	ELBOW 45 1-1/2 FPT X 1-1/2 FPT BRS	7512302	1.0	PC
* 030	NIPPLE 1-1/2 MPT X CLOSE BRS	7512000	1.0	PC
* 040	ELBOW 90 1-1/2 MPT X FPT BRS	7512300	1.0	PC
290	GE TANK INSULATION	0444331	1.0	ASSEM
* 010	TANK INSULATION (GE) SIDE PLAIN	4449013	1.0	PC
* 020	TANK INSULATION (GE) SIDE CUT OUTS	4449014	1.0	PC
* 030	TANK INSULATION (GE) BOTTOM	4449015	1.0	PC
* 040	TANK INSULATION (GE) END PLAIN	4449016	1.0	PC
* 050	TANK INSULATION (GE) END CUT OUT	4449017	1.0	PC

* PARTS NOT SHOWN ON DRAWING DETAIL

ALL DIMENSIONS ARE IN INCHES

THIS PRINT CONTAINS INFORMATION PROPRIETARY TO DIMPLEX THERMAL SOLUTIONS. MAY NOT BE DUPLICATED, REPRODUCED, OR SHARED IN ANY WAY WITHOUT THE EXPRESSED WRITTEN CONSENT OF DIMPLEX THERMAL SOLUTIONSS.

CONFIDENTIAL AND PROPRIETARY

DATE	DESCRIPTION OF REVISION	APPROVED BY

KOOLANT KOOLERS

Dimplex Thermal Solutions

SCHREIBER CHILLERS

DESIGN BY: MAR | DRAWN BY: MAR | KALAMAZOO, MI. PH (800) 968-5665 WWW.DIMPLEXTHERMAL.COM

DATE: 05/13/11 | PAGE 1 OF 1

W02-2-7500-2P-L-M

PLUMBING

DRAWING NO. 449666

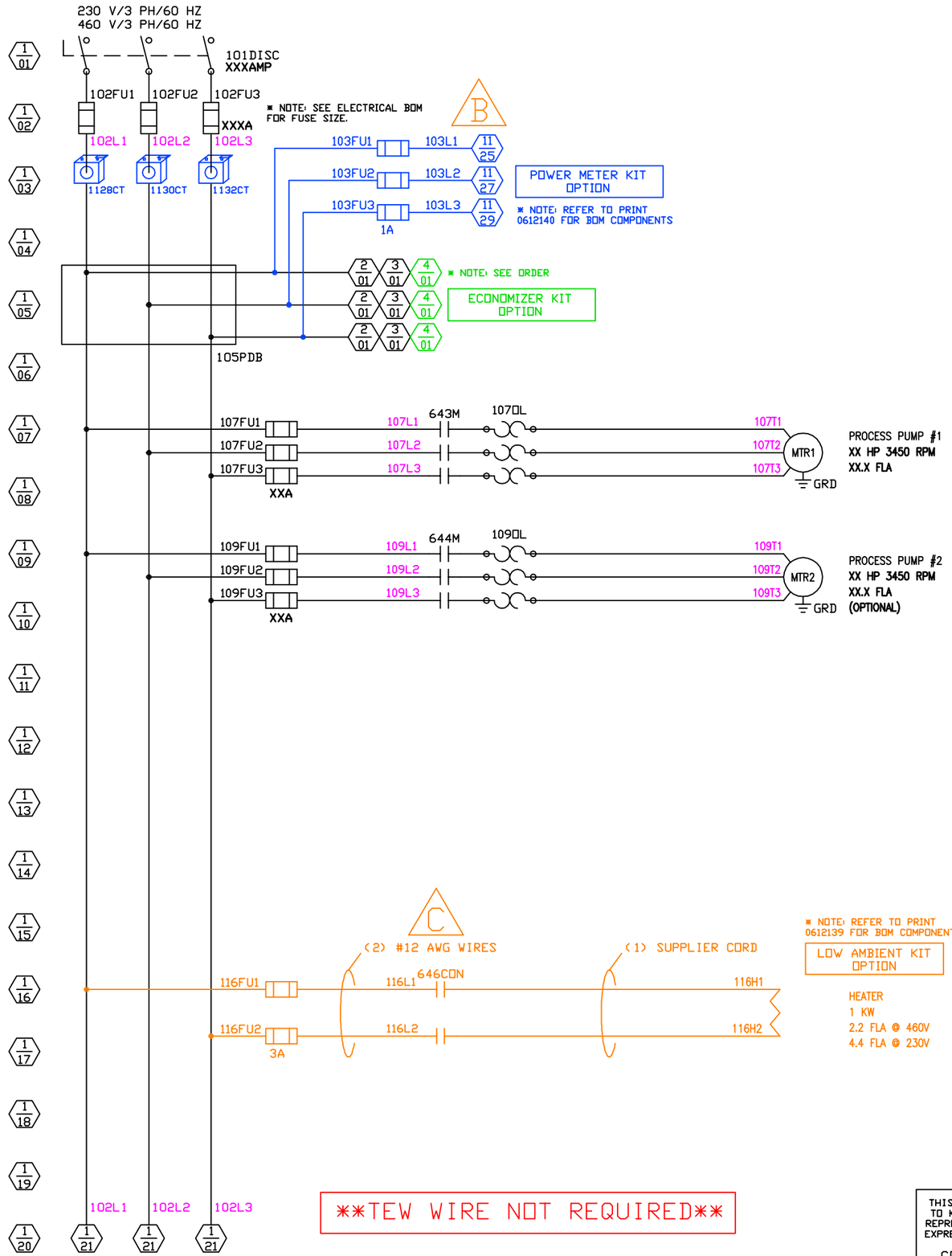

PUMP DATA TABLE						
HORSEPOWER	ITEM #	VOLTAGE	FLA (AMPS)	PUMP WIRE (AWG)	FUSE (AMPS)	OVERLOAD SETTING
1.5	1785003	230/3/60	7.0	14	15	8.7
1.5	1785003	460/3/60	3.5	14	15	4.3
2	1785004	230/3/60	11.6	12	20	14.5
2	1785004	460/3/60	5.8	14	15	7.2
3	1785007	230/3/60	12.6	12	20	15.7
3	1785007	460/3/60	6.3	14	15	7.8

TRANSFORMER DATA TABLE				
FUSE #	UNIT VOLTAGE	PRIMARY WIRE (AWG)	FUSE (AMPS)	PRIMARY JUMPER
130FU1-3	230/3/60	12	6	H1-H3 & H2-H4
130FU1-3	460/3/60	12	3	H2-H3
136FU1-2	230/3/60	12	6	H1-H3 & H2-H4
136FU1-2	460/3/60	12	3	H2-H3

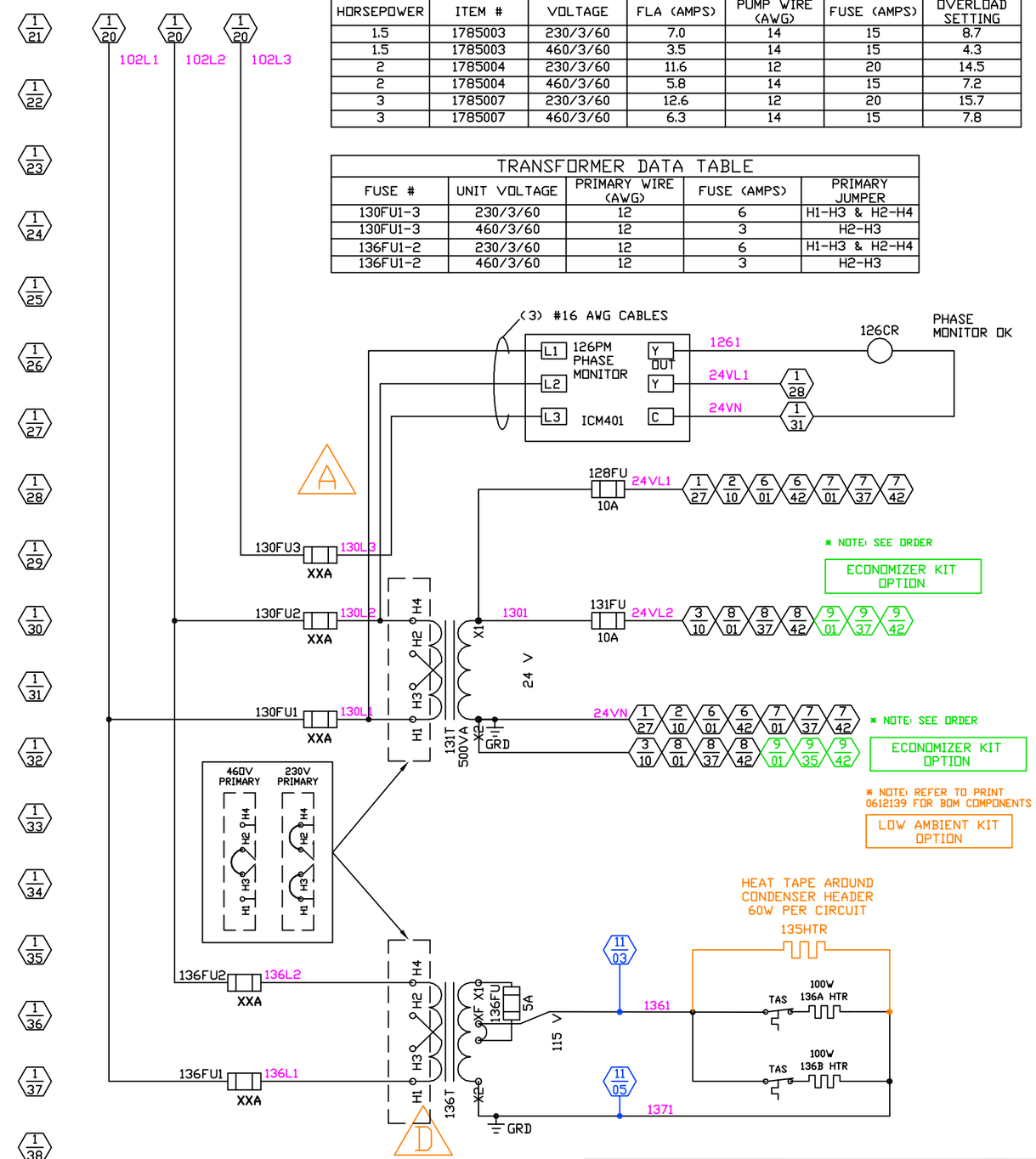

ALL DIMENSIONS ARE IN INCHES

THIS PRINT CONTAINS INFORMATION PROPRIETARY TO KOOLANT KOOLERS. MAY NOT BE DUPLICATED, REPRODUCED, OR SHARED IN ANY WAY WITHOUT THE EXPRESSED WRITTEN CONSENT OF KOOLANT KOOLERS.

CONFIDENTIAL AND PROPRIETARY

DATE	DESCRIPTION OF REVISION	APPROVED BY
09/22/10	CHG 136FU FROM 6A TO MATCH BOM	MAR <G>
08/23/10	ADDED TEW WIRE NOTE	MAR <F>
04/23/10	ADDED TXFMR TABLE	MAR <E>
04/22/10	CHG 136T FROM 250VA	MAR <D>
03/08/10	646CON WAS 205CON	MAR <C>
02/26/10	CHANGED CURRENT TRANS. LABELS	CJH <B>
2/16/10	MOVED PM, ADD 130FU3	MAR <A>

KOOLANT KOOLERS

Dimplex Thermal Solutions

SCHREIBER CHILLERS

DESIGN BY: MAR
DRAWN BY: MAR
DATE: 01/07/10
PAGE 1 OF X

KALAMAZOO, MI.
PH (800) 968-5665
WWW.DIMPLEXTHERMAL.COM

WO()-()-(2)P-M

ELECTRICAL

DRAWING NO. 443394

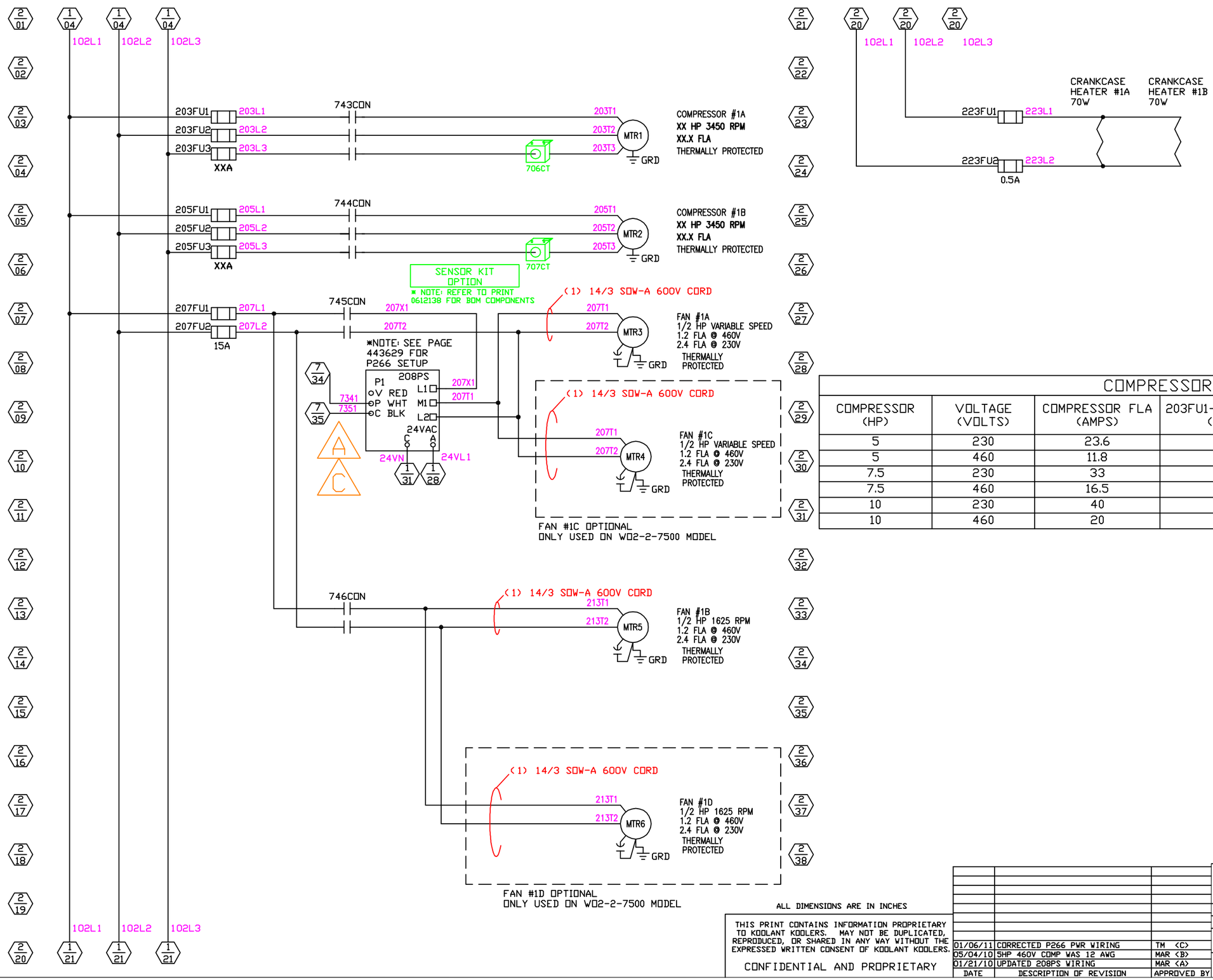

COMPRESSOR INFO

COMPRESSOR (HP)	VOLTAGE (VOLTS)	COMPRESSOR FLA (AMPS)	203FU1-3/205FU1-3 (AMPS)	CIRCUIT FLA	WIRE (AWG)
5	230	23.6	30	57.4	10
5	460	11.8	20	28.7	14
7.5	230	33	45	76.2	8
7.5	460	16.5	25	38.1	10
10	230	40	50	90.2	8
10	460	20	25	45.1	10

ALL DIMENSIONS ARE IN INCHES

THIS PRINT CONTAINS INFORMATION PROPRIETARY TO KOOLANT KOOLERS. MAY NOT BE DUPLICATED, REPRODUCED, OR SHARED IN ANY WAY WITHOUT THE EXPRESSED WRITTEN CONSENT OF KOOLANT KOOLERS.

CONFIDENTIAL AND PROPRIETARY

DATE	DESCRIPTION OF REVISION	APPROVED BY
01/06/11	CORRECTED P266 PWR WIRING	TM <C>
05/04/10	5HP 460V COMP WAS 12 AWG	MAR <B>
01/21/10	UPDATED 208PS WIRING	MAR <A>

KOOLANT KOOLERS

Dimplex Thermal Solutions

SCHREIBER CHILLERS

DESIGN BY: MAR | DRAWN BY: MAR | KALAMAZOO, MI. PH (800) 968-5665 WWW.DIMPLEXTHERMAL.COM

DATE: 01/07/10 | PAGE 2 OF X

WO()-()-(2)P-M

ELECTRICAL

DRAWING NO. 443395

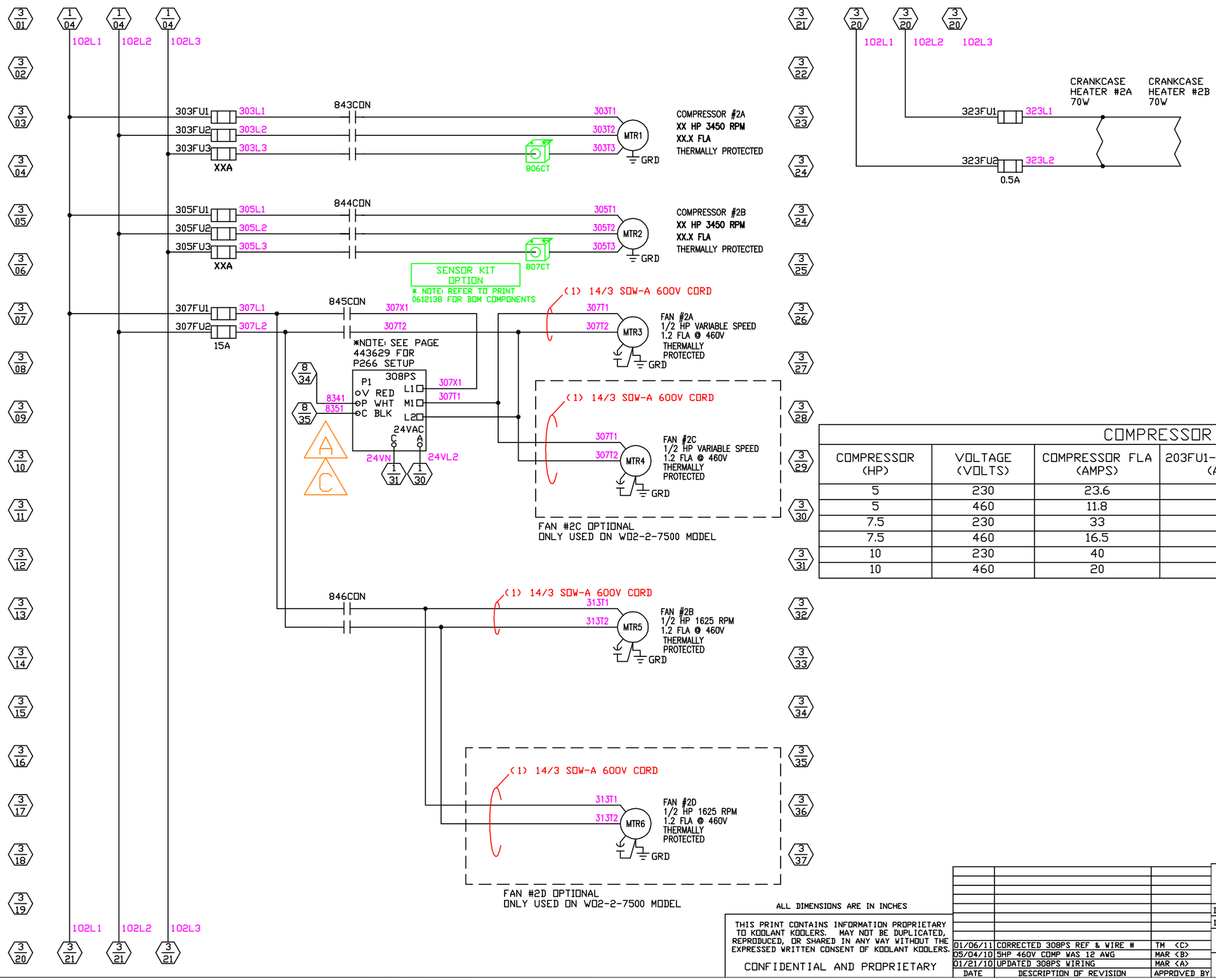

COMPRESSOR INFO

COMPRESSOR (HP)	VOLTAGE (VOLTS)	COMPRESSOR FLA (AMPS)	203FU1-3/205FU1-3 (AMPS)	CIRCUIT FLA	WIRE (AWG)
5	230	23.6	30	57.4	10
5	460	11.8	20	28.7	14
7.5	230	33	45	76.2	8
7.5	460	16.5	25	38.1	10
10	230	40	50	90.2	8
10	460	20	25	45.1	10

ALL DIMENSIONS ARE IN INCHES

THIS PRINT CONTAINS INFORMATION PROPRIETARY TO KOOLANT KOOLERS. MAY NOT BE DUPLICATED, REPRODUCED, OR SHARED IN ANY WAY WITHOUT THE EXPRESSED WRITTEN CONSENT OF KOOLANT KOOLERS.

CONFIDENTIAL AND PROPRIETARY

DATE	DESCRIPTION OF REVISION	APPROVED BY
01/06/11	CORRECTED 308PS REF & WIRE #	TM <C>
05/04/10	5HP 460V COMP WAS 12 AWG	MAR <B>
01/21/10	UPDATED 308PS WIRING	MAR <A>

KOOLANT KOOLERS

Dimplex Thermal Solutions

SCHREIBER CHILLERS

DESIGN BY: MAR | DRAWN BY: MAR | KALAMAZOO, MI. PH (800) 968-5665 WWW.DIMPLEXTHERMAL.COM

DATE: 01/07/10 | PAGE 3 OF X

W02-()-(2)P-M

ELECTRICAL

DRAWING NO. 443396

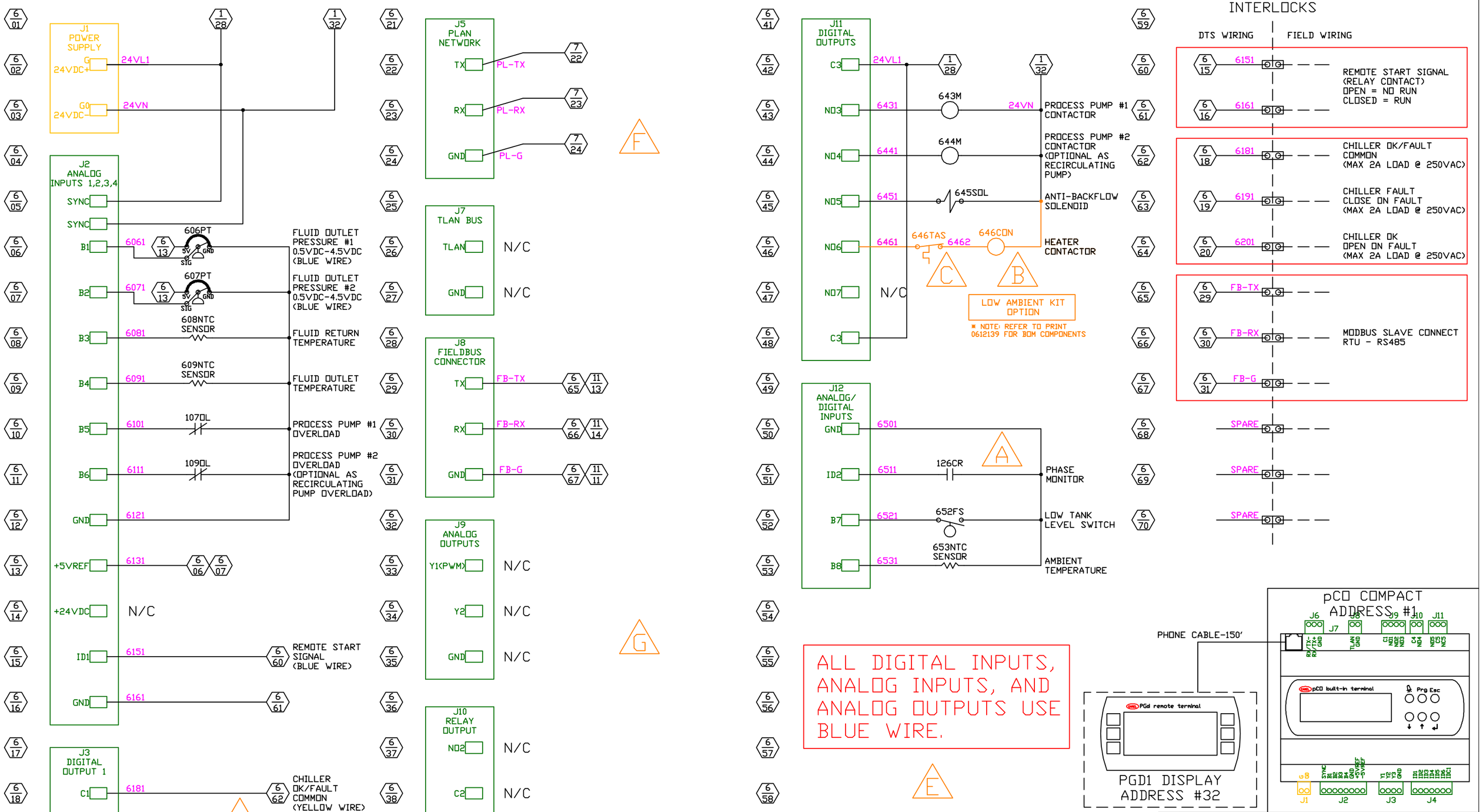

ALL DIMENSIONS ARE IN INCHES

THIS PRINT CONTAINS INFORMATION PROPRIETARY TO DIMPLEX THERMAL SOLUTIONS. MAY NOT BE DUPLICATED, REPRODUCED, OR SHARED IN ANY WAY WITHOUT THE EXPRESSED WRITTEN CONSENT OF DIMPLEX THERMAL SOLUTIONSS.

CONFIDENTIAL AND PROPRIETARY

DATE	DESCRIPTION OF REVISION	APPROVED BY
01/06/11	REMOVED COMP VFD OUTPUT	TM <G>
01/06/11	CORRECTED BUBBLING TO STANDARD	TM <F>
01/06/11	ADDED WIRING NOTE	TM <E>
01/06/11	CORRECTED REFERENCE	TM <D>
03/12/10	ADD 646TAS	MAR <C>
03/09/10	ADDED 646CON	MAR <B>
2/16/10	PHASE MON RELAY WAS 112CR	MAR <A>

KOOLANT KOOLERS

Dimplex Thermal Solutions

SCHREIBER CHILLERS

DESIGN BY: MAR
DATE: 01/07/09
DRAWN BY: MAR
PAGE 6 OF X

KALAMAZOO, MI.
PH (800) 968-5665
WWW.DIMPLEXTHERMAL.COM

W02-()-(2)P-M

ELECTRICAL

DRAWING NO. 443397

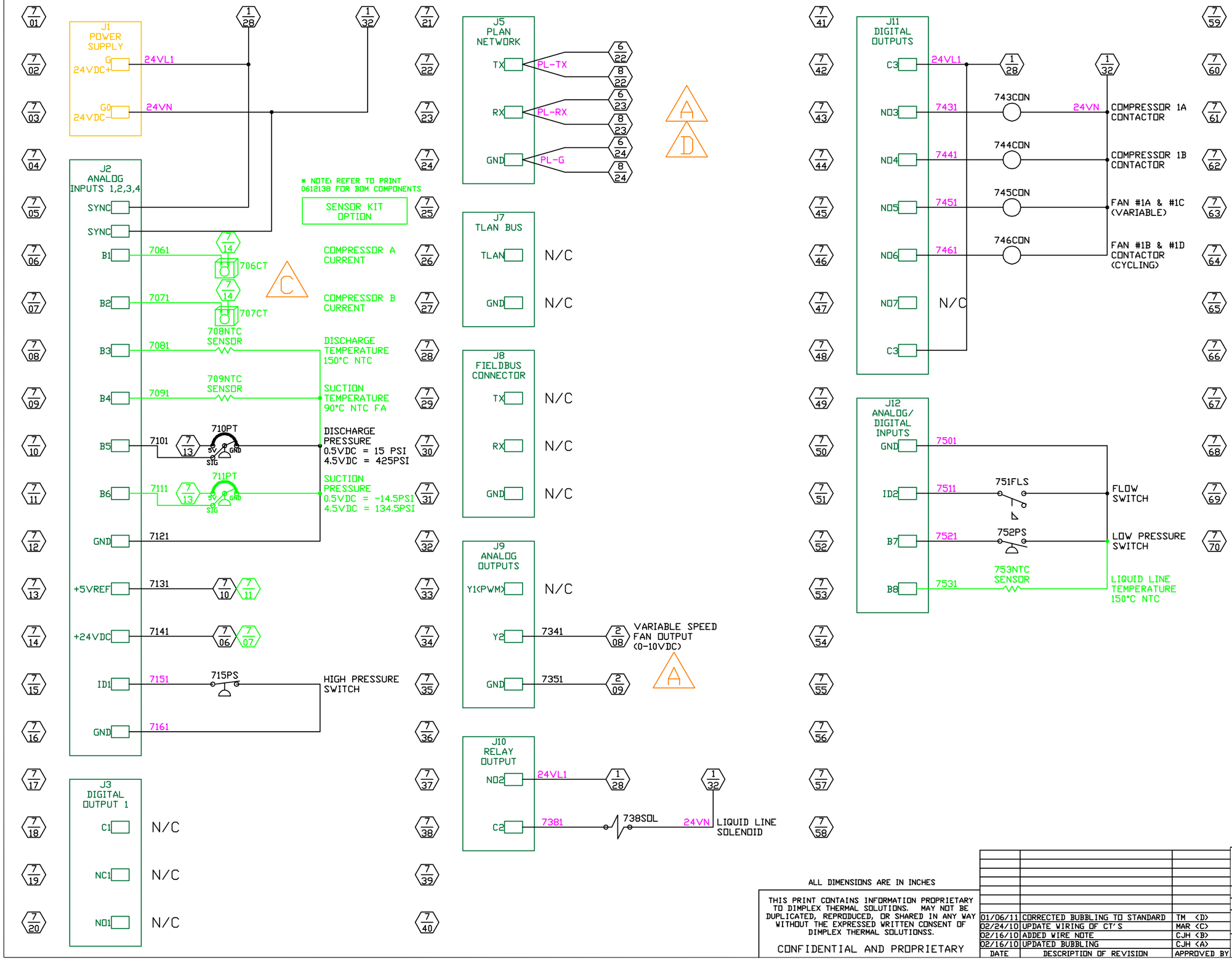

ALL DIGITAL INPUTS, ANALOG INPUTS, AND ANALOG OUTPUTS USE BLUE WIRE.

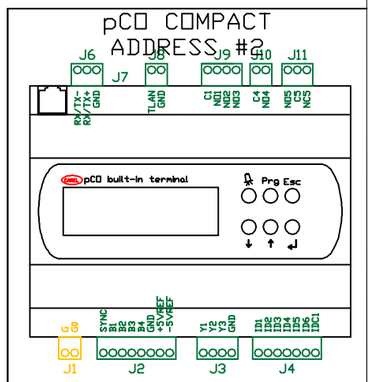

ALL DIMENSIONS ARE IN INCHES

THIS PRINT CONTAINS INFORMATION PROPRIETARY TO DIMPLEX THERMAL SOLUTIONS. MAY NOT BE DUPLICATED, REPRODUCED, OR SHARED IN ANY WAY WITHOUT THE EXPRESSED WRITTEN CONSENT OF DIMPLEX THERMAL SOLUTIONSS.

CONFIDENTIAL AND PROPRIETARY

DATE	DESCRIPTION OF REVISION	APPROVED BY
01/06/11	CORRECTED BUBBLING TO STANDARD	TM <D>
02/24/10	UPDATE WIRING OF CT'S	MAR <C>
02/16/10	ADDED WIRE NOTE	CJH <B>
02/16/10	UPDATED BUBBLING	CJH <A>

KOOLANT KOOLERS

Dimplex Thermal Solutions

SCHREIBER CHILLERS

DESIGN BY: MAR | DRAWN BY: MAR | KALAMAZOO, MI. PH (800) 968-5665 WWW.DIMPLEXTHERMAL.COM

DATE: 01/07/10 | PAGE 7 OF X

W02-()-(2)P-M

ELECTRICAL

DRAWING NO. 443398

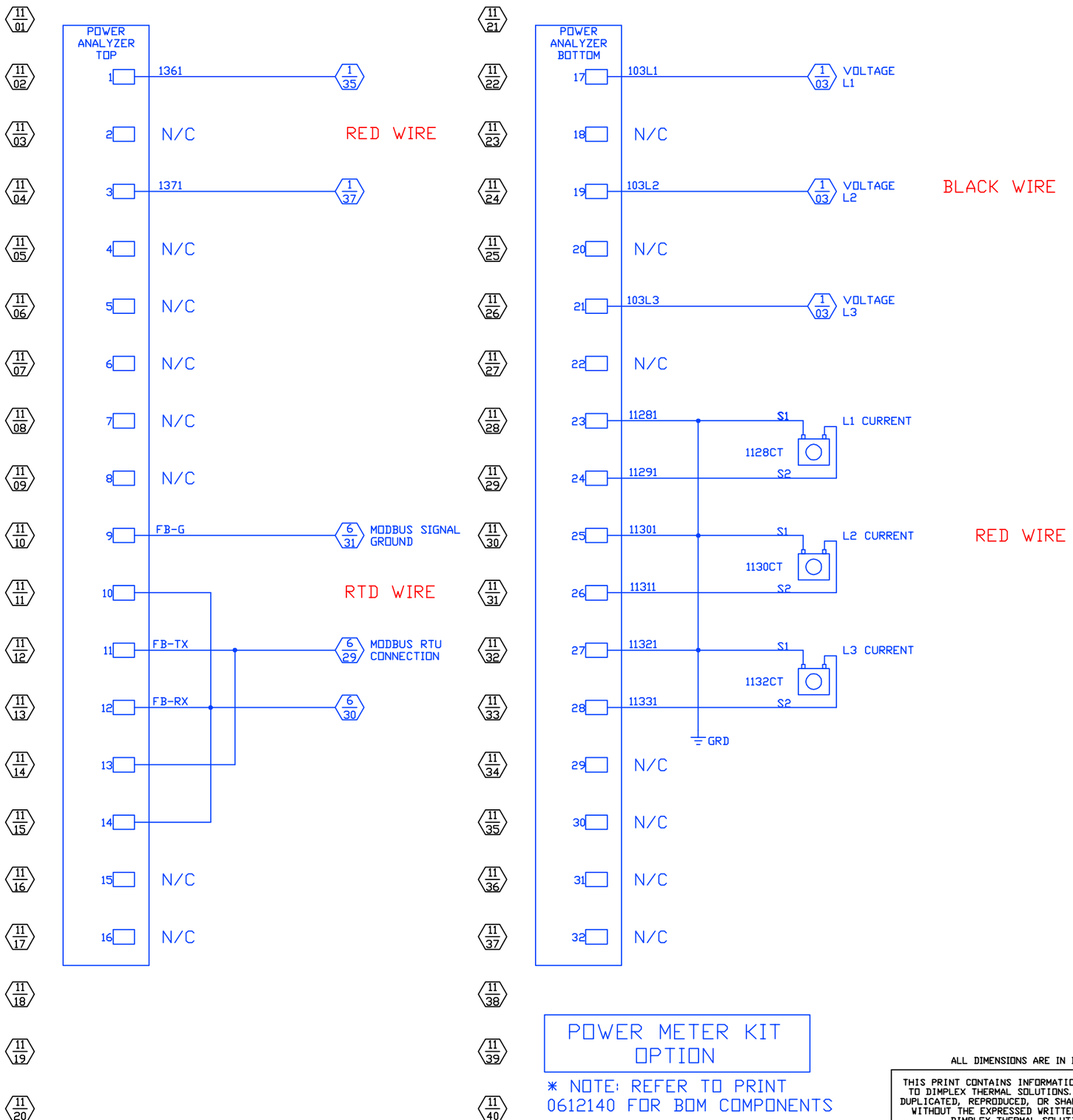

POWER METER KIT OPTION

* NOTE: REFER TO PRINT 0612140 FOR BOM COMPONENTS

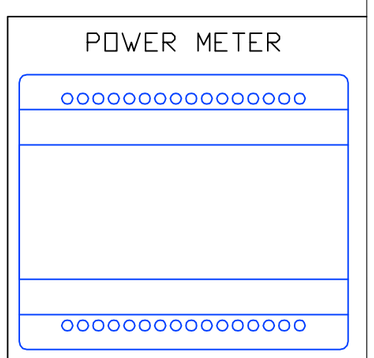

ALL DIMENSIONS ARE IN INCHES

THIS PRINT CONTAINS INFORMATION PROPRIETARY TO DIMPLEX THERMAL SOLUTIONS. MAY NOT BE DUPLICATED, REPRODUCED, OR SHARED IN ANY WAY WITHOUT THE EXPRESSED WRITTEN CONSENT OF DIMPLEX THERMAL SOLUTIONSS.

CONFIDENTIAL AND PROPRIETARY

DATE	DESCRIPTION OF REVISION	APPROVED BY
02/16/10	ADDED WIRE DESCRIPTIONS S1 & S2	CJH <C>
02/16/10	ADDED WIRE COLOR DIRECTIONS	CJH <B>
01/22/10	UPDATED METER WIRING	MAR <A>

KOOLANT KOOLERS

Dimplex Thermal Solutions

SCHREIBER CHILLERS

DESIGN BY: MAR | DRAWN BY: MAR | KALAMAZOO, MI. PH (800) 968-5665 WWW.DIMPLEXTHERMAL.COM

DATE: 01/07/09 | PAGE 11 OF X

POWER METER LOGIC

ELECTRICAL

DRAWING NO. 443503

P266 PARAMETERS

SETUP: TO SET YOUR PARAMETERS, FIRST ADJUST THE DIP SWTICHES AS INDICATED BELOW, THEN HOLD THE PUSH-BUTTON. ONCE THE LED FLASHES THE APPROPRIATE NUMBER OF TIMES, RELEASE THE PUSH-BUTTON. REPEAT FOR EACH SETTING BELOW.

SETTING	DIP SWITCH SETTING	RELEASE BUTTON AFTER	VALUE
START VOLTAGE VALUE	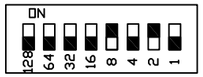	TWO FLASHES	10
START PRESSURE VALUE	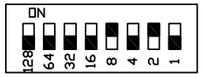	THREE FLASHES	10
END PRESSURE VALUE	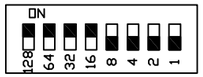	FOUR FLASHES	240
FINAL POSITION OF DIP SWITCHES	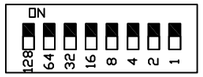	DO NOT PRESS	N/A

POWER METER PARMETERS

SETTING	DESCRIPTION	VALUE	VALUE DESCRIPTION
n_p	NEW PASSWORD	0	CHANGE PASSWORD
SYS	SYSTEM TYPE	3P	3-PHASE UNBALANCED WITHOUT NEUTRAL
Ct.r	CT RATIO	20	100A/5A = 20A FROM CT
Ut.r	VT Ratio	1	460V/460V = 1 FROM VOLTAGE
p.i.t	POWER INTEGRATION TIME	15	
A.i.t	CURRENT INTEGRATION TIME	1	
thd	HARMONIC ANALYSIS	YES	ENABLE
ou.1	OUTPUT #1	nd	NORMALLY DISABLED
ou.2	OUTPUT #2	nd	NORMALLY DISABLED
SEt			
Fis	FILTERING RANGE	2	
FIC	FILTERING COEFFICIENT	2	
Adr	SERIAL ADDRESS	1	
Bdr	BAUD RATE	19200	
H.rE	HOURS COUNTER RESET		
E.tr	TOTAL ENERGY COUNTERS RESET		
End	CONFIRM SELECTED VALUES		

E-Box Torque Settings

Item	*WO2-2-5000-2P-NF-L-M-R407C 460 volt (lb-in)*	*WO2-2-7500-2P-NF-L-M-R407C 460 volt (lb-in)*	*-10% (lb-in) *low and high end of range*	*+10% (lb-in) *low and high end of range*	*Torque Setting*
Pump/fan contactor power term.	22	22	19.8	24.2	20
Pump contactor overload term.	12	12	10.8	13.2	11
Pump/fan contactor control term.	8.9-13	8.9-13	8.01	14.3	11
Pump overload power terminals	22	22	19.8	24.2	20
Pump overload control term.	5	5	4.5	5.5	5
Compressor contactor power	13.3-22	13.3-22	11.97	24.2	20
Compressor contactor control	8.9-13	8.9-13	8.01	14.3	11
Carel Connectors - Large	5	5	4.5	5.5	5
Carel Connectors - Small	2	2	1.8	2.2	2
Fused terminal	25	25	22.5	27.5	25
Disconnect wire terminal	35	35	31.5	38.5	35
Disconnect fuse screw	35	35	31.5	38.5	35
Disconnect shaft set screw	12	12	10.8	13.2	11
Fuse block terminal	35	35	31.5	38.5	35
Transformer Allen Bradley	10	10	9	11	11
Transformer Dongan	16-18	16-18	14.4	19.8	20 *
Power Dist. Block Primary	120	120	108	132	120
Power Dist. Block Secondary #8	25	25	22.5	27.5	25
Power Dist. Block Sec #10-#14	20	20	18	22	20
Control relay socket terminals	5-9	5-9	4.5	9.9	5

*** Decision made at 20 lb-in for practicality.**

Torque Gun Settings: 5 lb-in 11 lb-in 20 lb-in 25 lb-in 35 lb-in 120 lb-in

CURRENT TRANSDUCER PARAMETERS

COMPRESSOR (HP)	VOLTAGE	SETTING
5	230/3/60	40
5	460/3/60	20
7.5	230/3/60	40
7.5	460/3/60	20
10	230/3/60	40
10	460/3/60	40

ALL DIMENSIONS ARE IN INCHES

THIS PRINT CONTAINS INFORMATION PROPRIETARY TO KOOLANT KOOLERS. MAY NOT BE DUPLICATED, REPRODUCED, OR SHARED IN ANY WAY WITHOUT THE EXPRESSED WRITTEN CONSENT OF KOOLANT KOOLERS.

CONFIDENTIAL AND PROPRIETARY

DATE	DESCRIPTION OF REVISION	APPROVED BY
07/12/10	UPDATED CAREL TORQUE SETTINGS	MAR <E>
05/07/10	ADDED TORQUE SETTINGS	MAR <D>
03/25/10	UPDATED START VALUE TO 10	MAR <C>
02/17/10	MOVED FINAL POSITION OF SWITCH'S ON	CJH <B>
01/21/10	UPDATED 208PS WIRING	MAR <A>

KOOLANT KOOLERS

Dimplex Thermal Solutions

SCHREIBER CHILLERS

DESIGN BY: MAR | DRAWN BY: MAR | KALAMAZOO, MI. PH (800) 968-5665 WWW.DIMPLEXTHERMAL.COM

DATE: 01/07/10 | PAGE 13 OF X

WO()-()-(2)P-M

ELECTRICAL

DRAWING NO. 443629

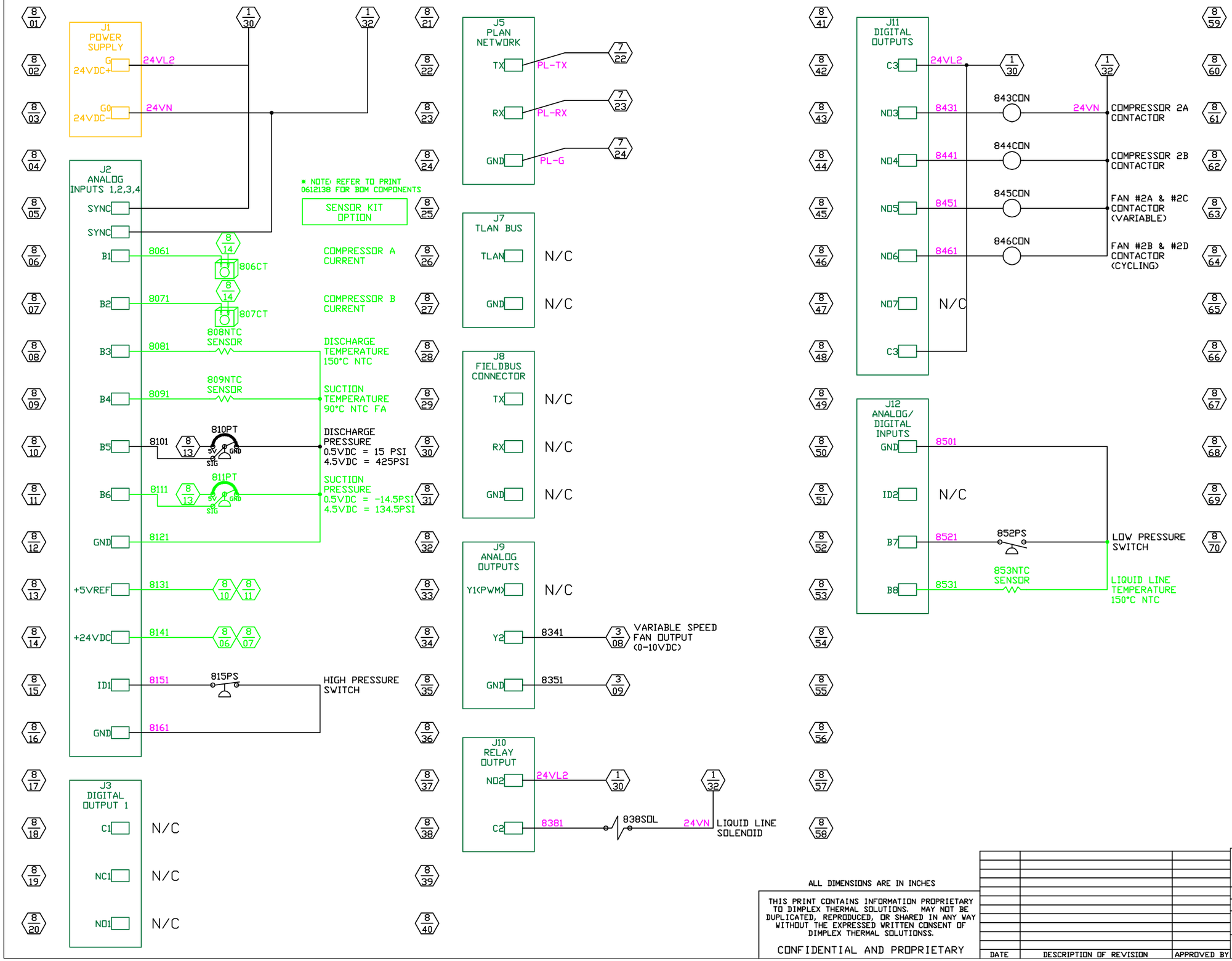

ALL DIGITAL INPUTS, ANALOG INPUTS, AND ANALOG OUTPUTS USE BLUE WIRE.

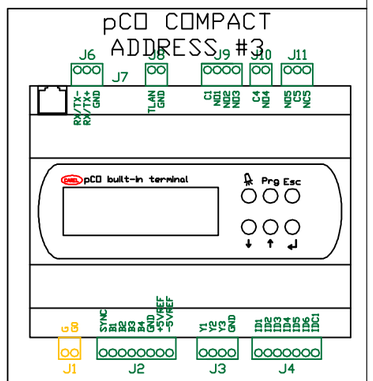

ALL DIMENSIONS ARE IN INCHES

THIS PRINT CONTAINS INFORMATION PROPRIETARY TO DIMPLEX THERMAL SOLUTIONS. MAY NOT BE DUPLICATED, REPRODUCED, OR SHARED IN ANY WAY WITHOUT THE EXPRESSED WRITTEN CONSENT OF DIMPLEX THERMAL SOLUTIONSS.

CONFIDENTIAL AND PROPRIETARY

DATE	DESCRIPTION OF REVISION	APPROVED BY

KOOLANT KOOLERS

Dimplex Thermal Solutions

SCHREIBER CHILLERS

DESIGN BY: MAR	DRAWN BY: MAR	KALAMAZOO, MI. PH (800) 968-5665 WWW.DIMPLEXTHERMAL.COM
DATE: 05/13/11	PAGE 8 OF X	

W02-()-2P-M

ELECTRICAL

DRAWING NO. 449665

ELECTRICAL PANEL

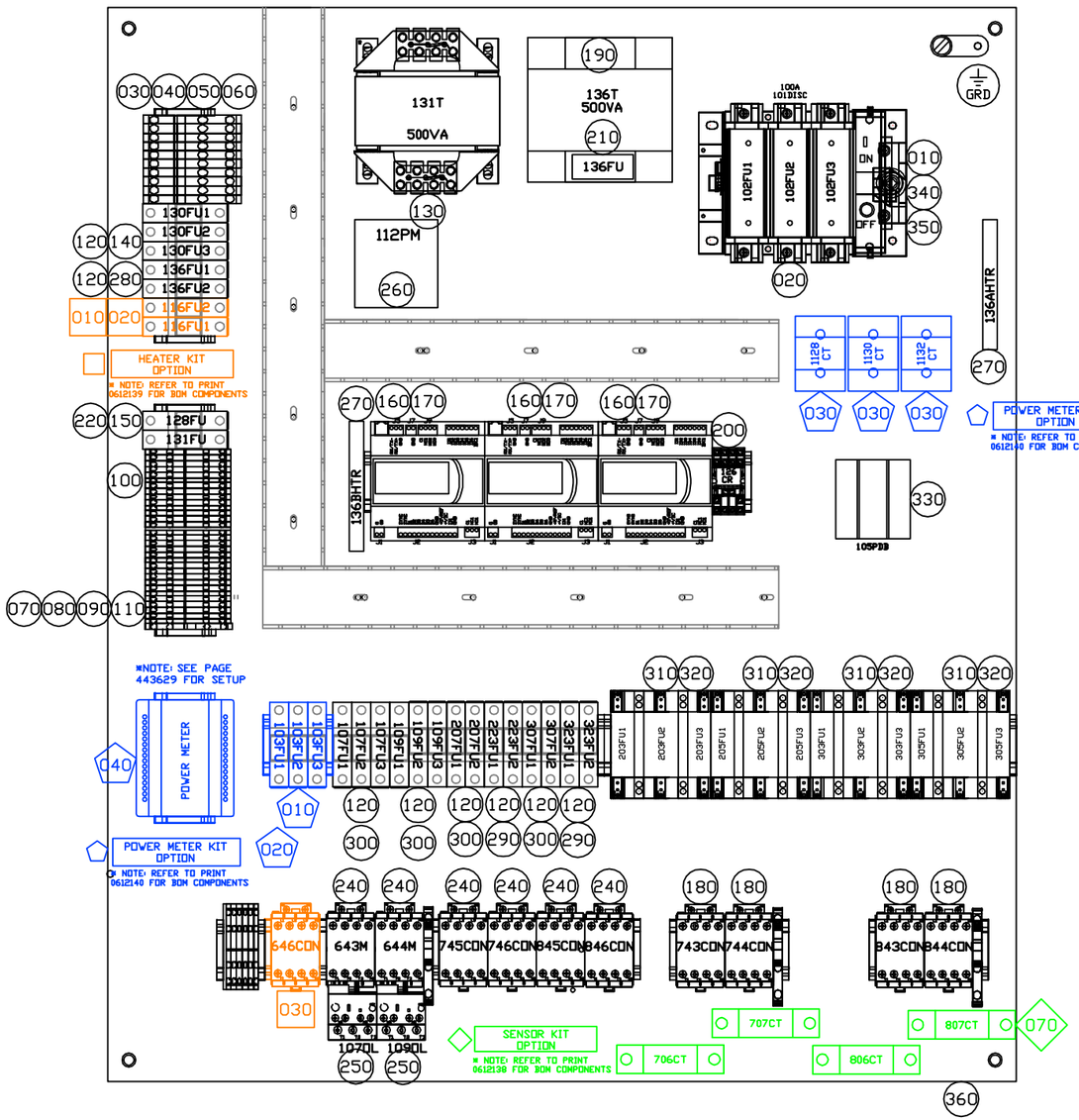

*NOTE: P266 VARIABLE SPEED CONTROLLERS ARE MOUNTED INSIDE MACHINE BEHIND ELECTRICAL ENCLOSURE.

653NTC

*NOTE: MOUNT AMBIENT SENSOR INSIDE CHILLER UNIT BEHIND AIR FILTERS.

SHIP LOOSE

	NO.	ID/DESCRIPTION	K. K. PART#	QTY	TYPE
*	350	194R-R4 CONNECTING ROD IEC	3114006	1.0	PC
		FITS 100 -200 AMP DISCONNECT SHAFT			
		FITS A BOX UP TO 18" DEEP			
		ALLEN BRADLEY			
	360	WO2-2-5000 EBOX PANEL 42X36	0443803	1.0	ASSEM
*	010	SHEET 12 GA GALV. 48 X 120	9531200	44.0	PC
		CHEMTREAT G-90 DRY 181.2 LBS/SHEET			
*	370	MODULAR PLUG, 6 POSITION 150'	4807789	1.0	PC
		CONSISTS OF: 2 PCS 86-402 PLUG AN			
*	380	PGD1000WZO WALL DISPLAY + BUZZER	4807797	1.0	PC
*	390	CAREL LOGIC PROGRAM #0905136a	0905136	1.0	PC
		Medical Line Chiller 1-4 Compress			
		ors, 1-2 Process Pumps iTool Softw			

FRONT VIEW OF ENCLOSURE

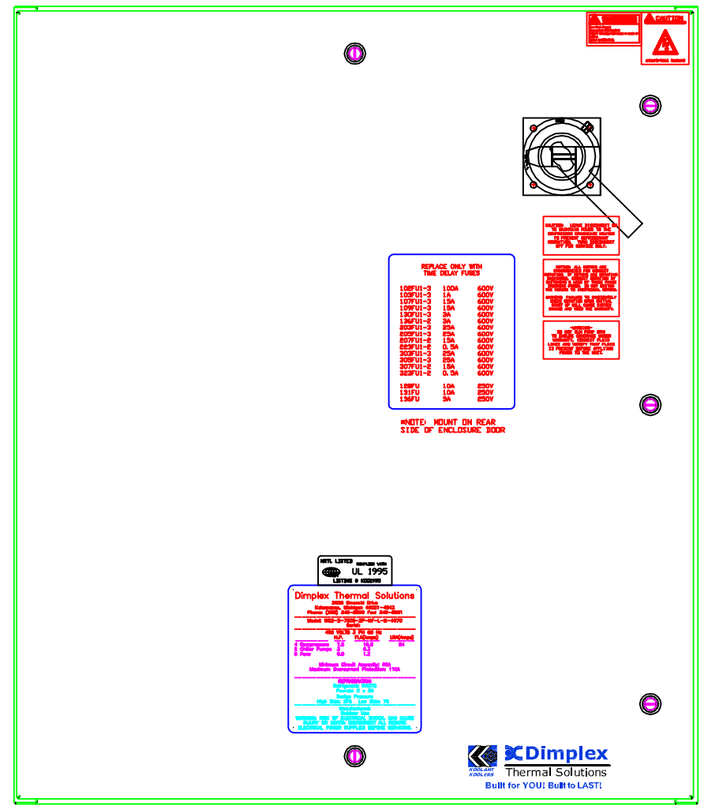

BOTTOM VIEW OF ENCLOSURE

ENCLOSURE
GALVANIZED = 3444093
STAINLESS STEEL = 344095

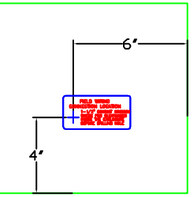

SHIP LOOSE

* PARTS NOT SHOWN ON DRAWING DETAIL

NO.	ID/DESCRIPTION	K. K. PART#	QTY	TYPE
001	WO2-15000-2P-NF-L-M-407C	0444795		ASSEM
010	194R-NJ100P34ER3 DISCONNECT 100A	3110005	1.0	PC
	70 AMP TO 100 AMP AJT FUSES WITH S			
	HAFT FOR UP TO 10" DEEP BOX FOR DEE			
	PER BOX, USE 3114006, COMES WITH LU			
	GS, ALLEN BRADLEY			
020	AJT100 OR LPJ100 FUSE	3500921	3.0	PC
	GOULD OR BUSSMANN			
030	1492-L6T TERMINAL BLOCK (50 AMP)	3123003	10.0	PC
	ALLEN BRADLEY			
040	1492-EBL6T END BARRIER (50 AMP)	3123085	4.0	PC
	ALLEN BRADLEY			
050	1492-ERL35 END ANCHOR(20/50 AMP)	3123087	11.0	PC
	ALLEN BRADLEY			
060	1492-LG6T GROUND BLOCK (50 AMP)	3123178	5.0	PC
	1 CIRCUIT, 2 CONNECTIONS, GREEN/YE			
	LLOW.			
070	1492-L3Q TERMINAL BLOCK (20 AMP)	3123021	35.0	PC
	ALLEN BRADLEY			
080	1492-EBL3Q END BARRIER (20 AMP)	3123086	2.0	PC
	ALLEN BRADLEY			
090	1492-LG3Q GROUNDING BLOCK (20 AMP)	3123017	3.0	PC
	ALLEN BRADLEY			
100	199-DR1 MOUNTING RAIL	3127100	2.0	PC
	5PC/BOX 1 METER LONG ALLEN BRADLEY			
110	1492-CJK510 JUMPER (20 AMP)	3123095	0.5	PC
	ALLEN BRADLEY			
120	CHCC1D FUSE HOLDER 30A, CC CLASS	3511203	19.0	PC
130	1497-G-BAJK-O-N TRANSFORMER 500VA	3160015	1.0	PC
140	ATDR3 OR FNQR3 FUSE	3500970	3.0	PC
	GOULD OR BUSSMANN			
150	TRM10 OR FNM10 FUSE	3500091	2.0	PC
	GOULD OR BUSSMANN			
160	PCOXOOOBAO COMPACT BOARD, CAREL	4807776	3.0	PC
	WITH PGD1, 1DI7DO,8AI,1AO,1PWM (3/			
	10 - OLD # SNSOOOOELO)			
170	PCOXCONOAO pCOxs Screw Terminals	4807777	3.0	PC
	FOR 7 RELAY BOARD (4/10 * OLD # SN			
	SCONOOLO)			
180	100-C23KJ10 CONTACTOR 24 VAC COIL	3100403	4.0	PC
	COIL RATED FOR BOTH 50 AND 60 HZ			
	ALLEN BRADLEY			
190	HC-0500-41 TRANSFORMER 500VA	3842502	1.0	PC
	500VA PRIMARY: 240 X 480 VAC, SECO			
	NDARY 120V TRIPLE RATED			
200	RU4 RELAY ASSEMBLY 24VAC	0611215	1.0	ASSEM
	RU4S-A24 RELAY SY4S-05C SOCKET SY4			
	S-02F1 HOLD DOWN SPRING			
* 001	RU4S-A24 RELAY 24VAC 4NO 4NC	3805001	1.0	PC
	RELAY IS FOR USE WITH 50 OR 60 HZ,			
	IDEC ADVANCE CONTROLS			
* 002	SY4S-05C RELAY SOCKET	3805002	1.0	PC
	USE WITH RELAY RU4S-A24, IDEC			
	ADVANCE CONTROLS			
210	TRM5 OR FNM5 FUSE	3500050	1.0	PC
	GOULD OR BUSSMANN			
220	CHM1D FUSED TERMINAL BLOCK BUSSMAN	3510900	2.0	PC
230	P266BCA-100C 460VAC FAN SPEED CTL	3646040	2.0	PC
	P266 FAN SPEED CONTROL, 440VAC TO			
	575VAC, 4 MAX OUTPUT AMPERES, 1 HIG			
	H VAC TRIACS, 0 AUX FAN CONTROL CIR			
	CUITS, RATED -40C TO +60C, JOHNSON			
	CONTROLS			
240	100-C09KJ10 CONTACTOR 24 VAC COIL	3100400	6.0	PC
	COIL RATED FOR BOTH 50 AND 60 HZ			
	ALLEN BRADLEY			
250	193-ED1DB RELAY 3.2-16 AMP	3103505	2.0	PC
	IEC FITS CONTACTOR M05-C23			
	ALLEN BRADLEY			
260	ICM401 PHASE MONITOR 190-600VAC	3813419	1.0	PC
270	100 WATT ENCLOSURE HEATER 120V	3835106	2.0	PC
	SILICON RUBBER 5"WIDE X 4.5" LONG			
	WITH THERMOSTAT ON AT 40°F OFF 6			
	0°F WITH 4 FOOT LEAD WIRES UL			
	RECOGNIZED, SR3841 ***12/22/09:			
	SIZE CHANGED FROM 4X5 AND OFF CHAN			
	GED FROM 55 TO 60***			
280	ATDR3 OR FNQR3 FUSE	3500970	2.0	PC
	GOULD OR BUSSMANN			
290	ATDR1/2 OR FNQR 1/2 FUSE	3500973	4.0	PC
	GOULD OR BUSSMANN			
300	ATDR15 OR FNQR15 FUSE	3500960	10.0	PC
	GOULD OR BUSSMANN			
310	60358SJ FUSE BLOCK 3 POLE 30A AJT	3501043	4.0	PC
	HOLDS LPJ,AJT 1-30A FUSES; 600 VAC			
	SPACE SAVING SIZE: 3.90 X 3.62 GOU			
	LD			
320	AJT25 OR LPJ25 FUSE	3500911	12.0	PC
	GOULD OR BUSSMANN			
330	63133 3P POWER DIST BLOCK (E100-DB)	3899410	1.0	PC
340	MP0617671 10K THERMISTOR 10' CAREL	4801215	1.0	PC
	PLATINUM, 2 WIRE CONSTRUCTION WITH			
	DRAIN WIRE ATTACHED TO SHEATH, 3/16			
	DIA SHEATH, 316 SST 5-1/2 OVERALL			
	LENGTH, 4-1/2 HOT LEG WITH 90° BEND			
	PVC LEAD-WIRE (300 VAC RATED) WITH			
	SHIELD AND DRAIN, 10 FT LONG GREY			
	WIRE COVER, NO COLD END TERMINATION			
	GENERALLY USED ON 15 TON UNITS AND			
	BELOW, WITH 4 POINT CRIMP CLASS A			

ALL DIMENSIONS ARE IN INCHES

THIS PRINT CONTAINS INFORMATION PROPRIETARY TO DIMPLEX THERMAL SOLUTIONS. MAY NOT BE DUPLICATED, REPRODUCED, OR SHARED IN ANY WAY WITHOUT THE EXPRESSED WRITTEN CONSENT OF DIMPLEX THERMAL SOLUTIONSS.

CONFIDENTIAL AND PROPRIETARY

DATE	DESCRIPTION OF REVISION	APPROVED BY
11/05/10	UPDATE 136FU FROM 1.5A TO 3A	MAR (B)
10/15/10	REMOVE MAIN FUSE SCCR FROM TAG	MAR (A)

KOOLANT KOOLERS

Dimplex Thermal Solutions

SCHREIBER CHILLERS

DESIGN BY: MAR | DRAWN BY: MAR | KALAMAZOO, MI. PH (800) 968-5665 WWW.DIMPLEXTHERMAL.COM

DATE: 04/26/10 | PAGE 12 OF X

WO2-2-7500-2P-L-M-407C

ELECTRICAL

DRAWING NO. 444795

ELECTRICAL PANEL

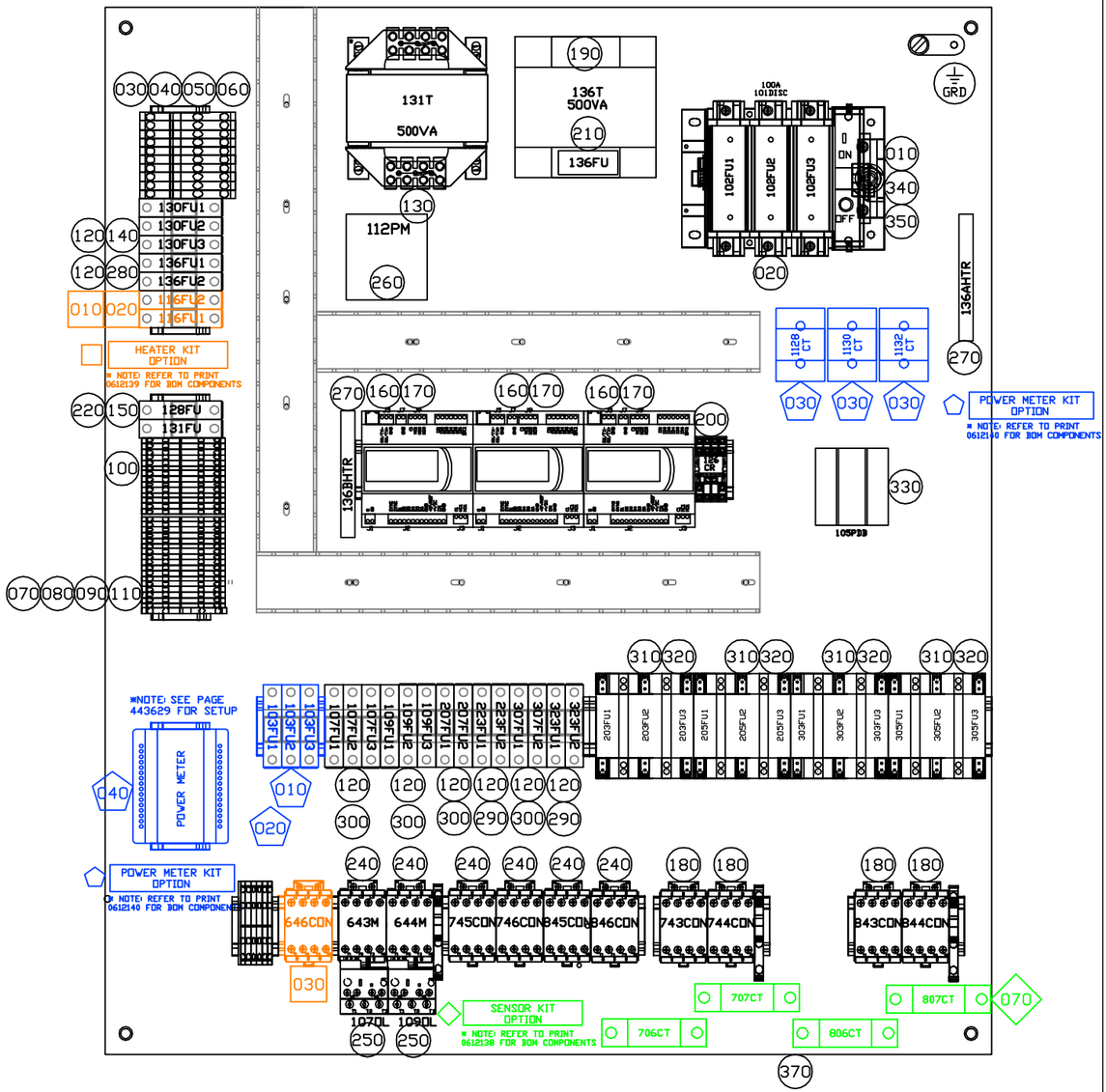

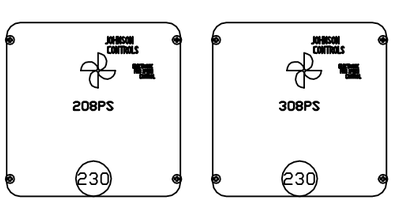

SET @ 20

*NOTE: ON TEST INSTALL TAG ON CT'S TO HOLD SELECTOR SWITCH IN PLACE.

*NOTE: P266 VARIABLE SPEED CONTROLLERS ARE MOUNTED INSIDE MACHINE BEHIND ELECTRICAL ENCLOSURE.

653NTC

*NOTE: MOUNT AMBIENT SENSOR INSIDE CHILLER UNIT BEHIND AIR FILTERS.

SHIP LOOSE

	NO.	ID/DESCRIPTION	K. K. PART#	QTY	TYPE
	350	194R-R4 CONNECTING ROD IEC	3114006	1.0	PC
		FITS 100 -200 AMP DISCONNECT SHAFT			
		FITS A BOX UP TO 18' DEEP AB			
	360	WO2-2-5000 EBOX PANEL 42X36	0443803	1.0	ASSEN
*	010	SHEET 12 GA GALV. 48 X ****	9531200	44.0	PC
		CHEMTREAT G-90 DRY			
*	370	MODULAR PLUG, 6 POSITION 150'	4807789	1.0	PC
		CONSISTS OF: 2 PCS 86-402 PLUG AND			
		150' AWC10152-W AWC 6C 26AWG LINE CORD			
*	380	PGD1000WZO WALL DISPLAY + BUZZER	4807797	1.0	PC
*	390	CAREL LOGIC PROGRAM #0905136a	0905136	1.0	PC

FRONT VIEW OF ENCLOSURE

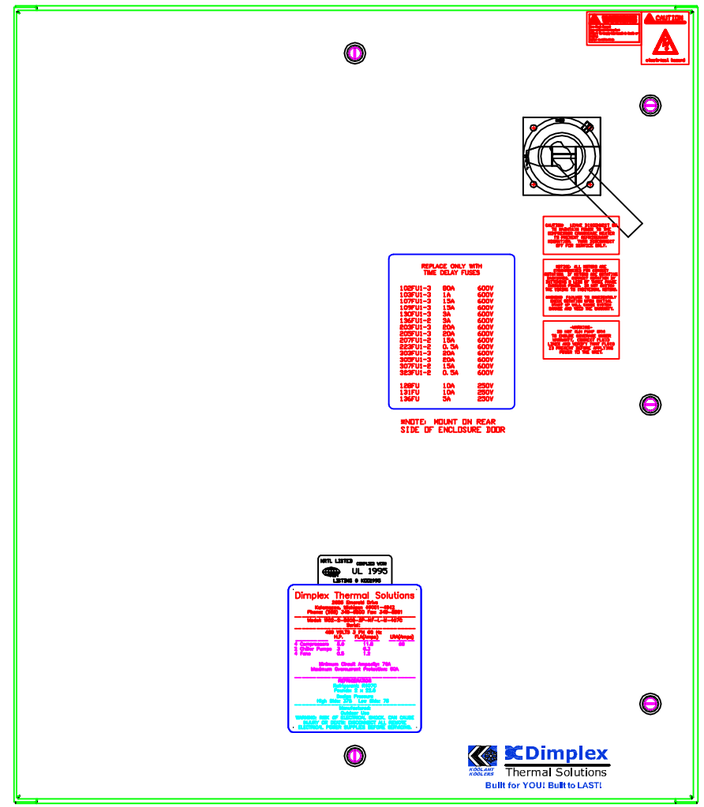

BOTTOM VIEW OF ENCLOSURE

ENCLOSURE
GALVANIZED = 3444094
STAINLESS STEEL = 344096

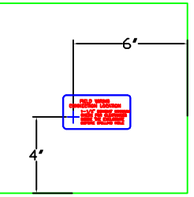

SHIP LOOSE

* PARTS NOT SHOWN ON DRAWING DETAIL

NO.	ID/DESCRIPTION	K. K. PART#	QTY	TYPE
001	WO2-2-5000-2P-NF-L-M-407C	0444849		ASSEN
010	194R-NJ100P34ER3 DISCONNECT 100A	3110005	1.0	PC
	70 AMP TO 100 AMP AJT FUSES WITH S			
	HAFT FOR UP TO 10' DEEP BOX, FOR DE			
	EPER BOX, USE 3114006, COMES WITH L			
	UGS, ALLEN BRADLEY			
020	AJT80 OR LPJ80 FUSE	3500919	3.0	PC
	GOULD OR BUSSMANN			
030	1492-L6T TERMINAL BLOCK (50 AMP)	3123003	10.0	PC
	ALLEN BRADLEY			
040	1492-EBL6T END BARRIER (50 AMP)	3123085	4.0	PC
	ALLEN BRADLEY			
050	1492-ERL35 END ANCHOR(20/50 AMP)	3123087	11.0	PC
	ALLEN BRADLEY			
060	1492-LG6T GROUND BLOCK (50 AMP)	3123178	5.0	PC
	1 CIRCUIT, 2 CONNECTIONS, GREEN/YELLOW			
070	1492-L3Q TERMINAL BLOCK (20 AMP)	3123021	35.0	PC
	ALLEN BRADLEY			
080	1492-EBL3Q END BARRIER (20 AMP)	3123086	2.0	PC
	ALLEN BRADLEY			
090	1492-LG3Q GROUNDING BLOCK (20 AMP)	3123017	3.0	PC
	ALLEN BRADLEY			
100	199-DR1 MOUNTING RAIL	3127100	2.0	PC
	5PC/BOX 1 METER LONG ALLEN BRADLEY			
110	1492-CJK510 JUMPER (20 AMP)	3123095	0.5	PC
	ALLEN BRADLEY			
120	CHCC1D FUSE HOLDER 30A, CC CLASS	3511203	19.0	PC
130	1497-G-BAJK-O-N TRANSFORMER 500VA	3160015	1.0	PC
140	ATDR3 OR FNQR3 FUSE	3500970	3.0	PC
	GOULD OR BUSSMANN			
150	TRM10 OR FNM10 FUSE	3500091	2.0	PC
	GOULD OR BUSSMANN			
160	PCOX000BAO COMPACT BOARD, CAREL	4807776	3.0	PC
	WITH PGD1, 1DI7DO, 8AI, 1AO, 1PWM (3/			
	10 - OLD # SNS0000ELO)			
170	PCOXCONOAO pCOxs Screw Terminals	4807777	3.0	PC
	FOR 7 RELAY BOARD (4/10 * OLD # SN			
	SCONOOLO)			
180	100-C12KJ10 CONTACTOR 24 VAC COIL	3100401	4.0	PC
	COIL RATED FOR BOTH 50 AND 60 HZ A			
	LLEN BRADLEY			
190	HC-0500-41 TRANSFORMER 500VA	3842502	1.0	PC
	500VA PRIMARY: 240 X 480 VAC, SECO			
	NDARY 120V TRIPLE RATED			
200	RU4 RELAY ASSEMBLY 24VAC	0611215	1.0	ASSEN
	RU4S-A24 RELAY SU4S-11L SPRING CLA			
	MP, SY4S-02F1 HOLD DOWN SPRING,			
* 010	RU4S-A24 RELAY 24VAC 4NO 4NC	3805001	1.0	PC
	RELAY IS FOR USE WITH 50 OR 60 HZ,			
	IDEC ADVANCE CONTROLS			
* 020	SU4S-11L RELAY SOCKET	3805006	1.0	PC
	SPRING CLAMP IDEC			
210	TRM5 OR FNM5 FUSE GOULD OR BUSSMANN	3500050	1.0	PC
220	CHM1D FUSED TERMINAL BLOCK BUSSMAN	3510900	2.0	PC
230	P266BCA-100C 460VAC FAN SPEED CTL**	3646040	2.0	PC
	P266 FAN SPEED CONTROL, 440VAC TO			
	575VAC, 4 MAX OUTPUT AMPERES, 1 HIG			
	H VAC TRIACS, 0 AUX FAN CONTROL CIR			
	CUITS, RATED -40C TO +60C, JOHNSON			
	CONTROLS			
240	100-C09KJ10 CONTACTOR 24 VAC COIL	3100400	6.0	PC
	COIL RATED FOR BOTH 50 AND 60 HZ			
	ALLEN BRADLEY			
250	193-ED1DB RELAY 3.2 - 16 AMP	3103505	2.0	PC
	IEC FITS CONTACTOR M05-C23			
	ALLEN BRADLEY			
260	ICM401C-LF PHASE MONITOR 190-600VAC	3813421	1.0	PC
270	100 WATT ENCLOSURE HEATER 120V	3835106	2.0	PC
	SILICON RUBBER 5'WIDE X 4.5' LONG			
	WITH THERMOSTAT ON AT 40°F OFF 6			
	0°F WITH 4 FOOT LEAD WIRES UL			
	RECOGNIZED, SR3841 ***12/22/09:			
	SIZE CHANGED FROM 4X5 AND OFF CHAN			
	GED FROM 55 TO 60*** TEMPCO			
280	ATDR3 OR FNQR3 FUSE	3500970	2.0	PC
	GOULD OR BUSSMANN			
290	ATDR1/2 OR FNQR 1/2 FUSE	3500973	4.0	PC
	GOULD OR BUSSMANN			
300	ATDR15 OR FNQR15 FUSE	3500960	10.0	PC
	GOULD OR BUSSMANN			
310	60358SJ FUSE BLOCK 3 POLE 30A AJT	3501043	4.0	PC
	HOLDS LPJ, AJT 1-30A FUSES, 600 VAC			
	SPACE SAVING SIZE: 3.90 X 3.62 GOULD			
320	AJT20 OR LPJ20 FUSE	3500910	12.0	PC
	GOULD OR BUSSMANN			
330	63133 3P POWER DIST BLOCK (E100-DB)	3899410	1.0	PC
340	MP0617671 10K THERMISTOR 10' CAREL	4801215	1.0	PC
	PLATINUM, 2 WIRE CONSTRUCTION WITH			
	DRAIN WIRE ATTACHED TO SHEATH, 3/16			
	DIA SHEATH, 316 SST 5-1/2 OVERALL			
	LENGTH, 4-1/2 HOT LEG WITH 90° BEND			
	PVC LEAD-WIRE (300 VAC RATED) WITH			
	SHIELD AND DRAIN, 10 FT LONG GREY			
	WIRE COVER, NO COLD END TERMINATION			
	GENERALLY USED ON 15 TON UNITS AND			
	BELOW, WITH 4 POINT CRIMP CLASS A			
	SENSORTEC; 11/8/10: WIRED CHANGED			
	TO 600 VOLT, UL****			

ALL DIMENSIONS ARE IN INCHES

THIS PRINT CONTAINS INFORMATION PROPRIETARY TO DIMPLEX THERMAL SOLUTIONS. MAY NOT BE DUPLICATED, REPRODUCED, OR SHARED IN ANY WAY WITHOUT THE EXPRESSED WRITTEN CONSENT OF DIMPLEX THERMAL SOLUTIONSS.

CONFIDENTIAL AND PROPRIETARY

DATE	DESCRIPTION OF REVISION	APPROVED BY
11/05/10	UPDATE 136FU FROM 1.5A TO 3A	MAR (B)
10/15/10	REMOVE DISC SCCR FROM TAG	MAR (A)

KOOLANT KOOLERS

Dimplex Thermal Solutions

SCHREIBER CHILLERS

DESIGN BY: MAR | DRAWN BY: MAR | KALAMAZOO, MI. PH (800) 968-5665 WWW.DIMPLEXTHERMAL.COM

DATE: 04/29/10 | PAGE 12 OF X

WO2-2-5000-2P-L-M-407C

ELECTRICAL

DRAWING NO. 444849