VIBRATION MOUNT INSTALLATION MANUAL REV. 1

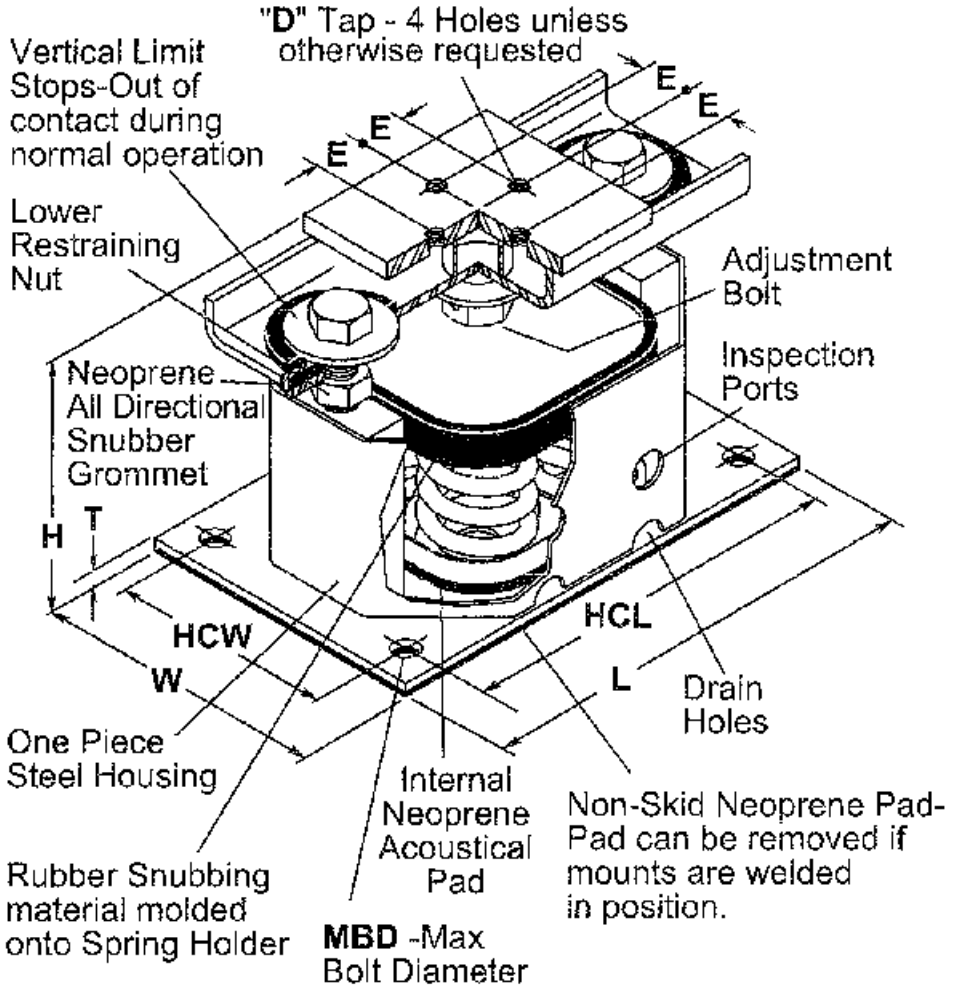

REVISION HISTORY

LEVEL	DATE	REVISION DESCRIPTION	SIGNATURES
1	1 April 2010	Draft	

Table of Contents

REVISION HISTORY 2

INSTALLATION 4

COMPONENT INFORMATION 5

DRAWINGS 7

INSTALLATION

1. The Vibration Mounting consist of 8 vibration springs Mason model SLRS B-750 rated for use with the Heat Exchanger models *WO2-2-7500-2P-NF-L-M-R407C and WO2-2-7500-2P-NF-L-M-R407C*.

2. The Vibration Mounting springs are used to reduce noise transmission when Heat Exchanger is roof mounted above occupied spaces and also aide in accomplishing seismic protection.

3. The Vibration Mounting should be bolted to the support I-beam and to the prepunched hole pattern in the Heat Exchanger feet.

4. A vibration eliminator or hose section (not provided) must be used in the piping between the Heat Exchanger and roof to prevent noise transmission. Conduit runs must also include a flexible section.

COMPONENT INFORMATION

FLOOR MOUNTED EQUIPMENT

SLRS 1"(*25mm*) Defl. B, 1 - 9 Springs

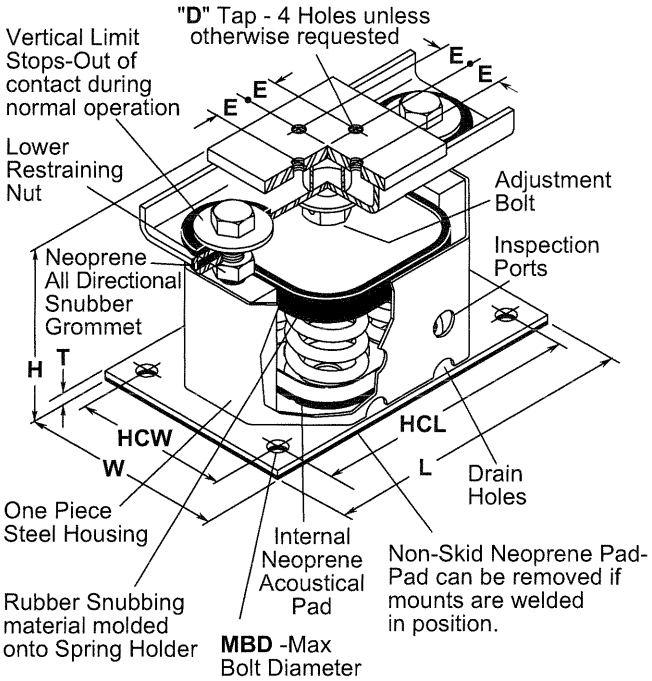

Illustration above shows a SLRS-4 (4 springs). SLRS-B & -1 have one spring, and SLRS-2 has two springs, SLRS-6 has six springs and SLRS-9 has nine springs. SLRS-1 and multiple spring mounts have C size springs.

Designs using these mounts to resist wind loads must be in accordance with ASCE 7-02.

Housing load ratings expressed in G's are based on tests with bolted connections to steel top and bottom. SLRS housings require uniform support under entire base plate.

OSHPD OPA-194
Rated Load Curves (lbs *kg*)

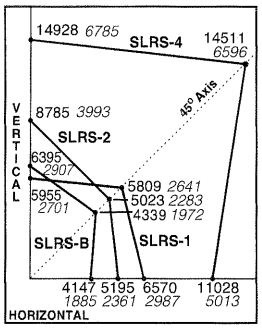

Horizontal, Vertical and 45° plotted Ratings are California OSHPD approved values having the OSHPD Anchorage Preapproval Number OPA-0194. Testing and calculations were performed to meet OSHPD criteria.

To use approved OSHPD rated load curves:

1) Calculate Vertical and Horizontal Forces on mountings including translations and overturning moments.
2) Plot Horizontal and Vertical Loads. The intersection must fall within the area below the OSHPD curve.

TYPE SLRS DIMENSIONS (inches and *mm*)

Size	H	T	D	E	L	HCL	W	HCW	MBD
B	8 1/2 *216*	3/8 *10*	1/2 *13*	1 1/8 *29*	8 1/2 *216*	7 *178*	4 1/4 *108*	2 3/4 *70*	5/8 *16*
1	8 1/2 *216*	3/8 *10*	5/8 *16*	1 3/8 *35*	9 1/2 *241*	7 1/2 *191*	5 1/4 *133*	3 1/2 *89*	5/8 *16*
2	8 1/2 *216*	3/8 *10*	5/8 *16*	1 3/8 *35*	14 *356*	12 1/4 *311*	5 1/4 *133*	3 1/2 *89*	5/8 *16*
4	8 1/2 *216*	3/8 *10*	7/8 *22*	1 3/8 *35*	13 *330*	11 *279*	8 3/8 *213*	6 1/4 *159*	3/4 *19*
6	9 *229*	1/2 *13*	1 *25*	1 5/8 *41*	16 1/2 *419*	14 *356*	8 3/8 *213*	6 *152*	1 *25*
9	9 3/4 *248*	5/8 *16*	1 *25*	2 *51*	17 *432*	14 3/4 *375*	13 *330*	10 3/4 *273*	1 *25*

TYPE SLRS RATINGS

*with Red inner spring
**with Green inner spring

SLRS Size	Rated Capacity (lbs) *(kg)*	Rated Defl (in) *(mm)*	Mount Constant (lbs/in) *(kg/mm)*	Max. G Rating	Spring Color
B-65	65 *29*	2.10 *53*	31 *0.55*	24.6	Brown
B-85	85 *39*	2.10 *53*	40 *0.74*	18.9	White††
B-115	115 *52*	2.00 *51*	57 *1.02*	13.9	Silver
B-150	150 *68*	2.00 *51*	75 *1.33*	10.6	Orange
B-280	280 *127*	1.60 *41*	174 *3.10*	5.7	Green
B-450	450 *204*	1.31 *33*	344 *6.18*	3.5	Red
B-750	750 *340*	1.12 *28*	670 *12.14*	2.1	White
B-1000	1000 *454*	1.00 *25*	1000 *18.16*	1.6	Blue
1-1000	1000 *454*	1.00 *25*	1000 *18.16*	6.0	Black
1-1350	1350 *612*	1.00 *25*	1350 *24.48*	4.4	Yellow
1-1750	1750 *794*	1.00 *25*	1750 *31.76*	3.4	Black*
1-2100	2100 *953*	1.00 *25*	2100 *38.12*	2.8	Yellow
1-2385	2385 *1082*	1.00 *25*	2385 *43.28*	2.5	Yellow**
1-2650	2650 *1202*	1.00 *25*	2650 *48.08*	2.3	Red*
1-2935	2935 *1331*	1.00 *25*	2935 *53.24*	2.0	Red**
2-3500	3500 *1588*	1.00 *25*	3500 *63.52*	1.5	Black*
2-4200	4200 *1905*	1.00 *25*	4200 *76.20*	1.2	Yellow*
2-4770	4770 *2164*	1.00 *25*	4770 *86.56*	1.1	Yellow**
4-5400	5400 *2449*	1.00 *25*	5400 *97.96*	2.0	Yellow
4-7000	7000 *3175*	1.00 *25*	7000 *127.00*	1.6	Black*
4-8400	8400 *3810*	1.00 *25*	8400 *152.40*	1.3	Yellow*
4-9540	9540 *4327*	1.00 *25*	9540 *173.08*	1.2	Yellow**
4-10600	10600 *4808*	1.00 *25*	10600 *192.32*	1.1	Red*
4-11740	11740 *5325*	1.00 *25*	11740 *213.00*	0.9	Red**
6-12600	12600 *5715*	1.00 *25*	12600 *228.60*	1.5	Yellow*
6-14310	14310 *6491*	1.00 *25*	14310 *259.64*	1.4	Yellow**
6-15900	15900 *7212*	1.00 *25*	15900 *288.48*	1.2	Red*
6-17610	17610 *7988*	1.00 *25*	17610 *319.52*	1.1	Red**
9-18900	18900 *8573*	1.00 *25*	18900 *342.92*	1.4	Yellow*
9-21465	21465 *9736*	1.00 *25*	21465 *389.44*	1.2	Yellow**
9-23850	23850 *10818*	1.00 *25*	23850 *432.72*	1.1	Red*

SPRING CHARACTERISTICS (inches and *mm*)

Spring Size	OD	Free Height	Ratio Kx/Ky	Ratio OD/OH
B	2 3/8 *60*	4 *102*	0.70-0.80	0.80
C	2 7/8 *73*	4 1/8 *105*	0.90-1.10	0.92

All springs have an additional travel to solid equal to 50% of the rated deflection.

Solid Spring Height = Free Height minus 1.5 times the Rated Deflection.

APPROVED

California Office of Statewide Health Planning and Development

FIXED EQUIPMENT ANCHORAGE

OPA-0194 January 6, 2003

Bill Staehlin (916) 654-3362

MASON INDUSTRIES, Inc.
Manufacturers of Vibration Control Products
NY Mailing Address: PO Box 410, Smithtown, NY 11787

350 Rabro Drive
Hauppauge, NY 11788
631/348-0282
FAX 631/348-0279
Info@Mason-Ind.com

2101 W. Crescent Ave., Suite D
Anaheim, CA 92801
714/535-2727
FAX 714/535-5738
Info@MasonAnaheim.com

Gummadi Dharma Reddy
Civil Engineer
California No. 29627

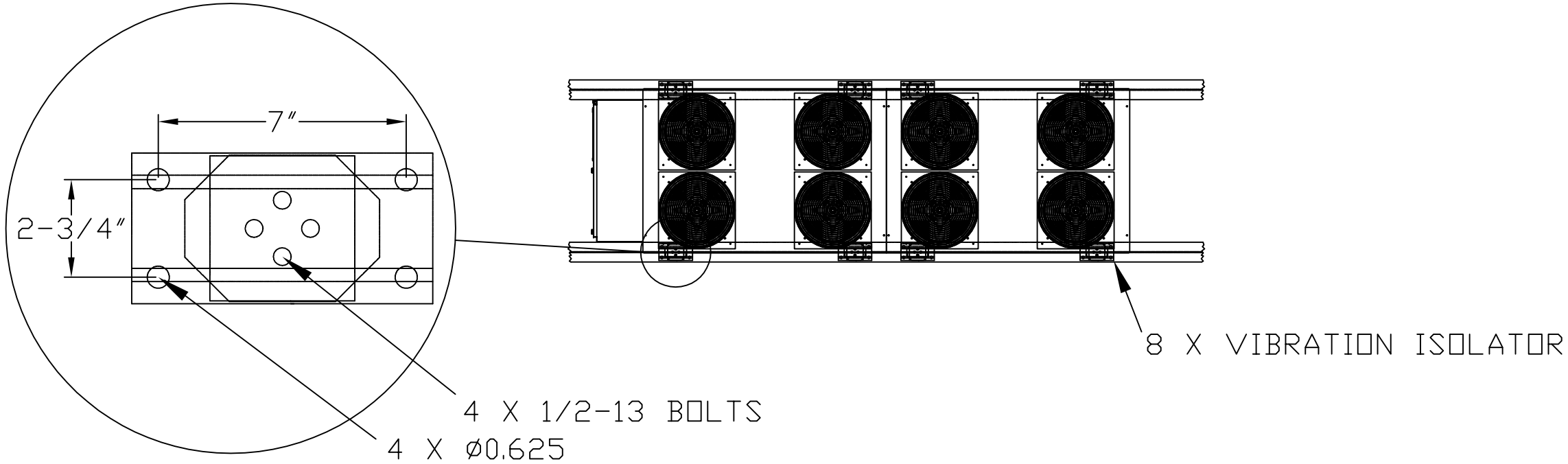

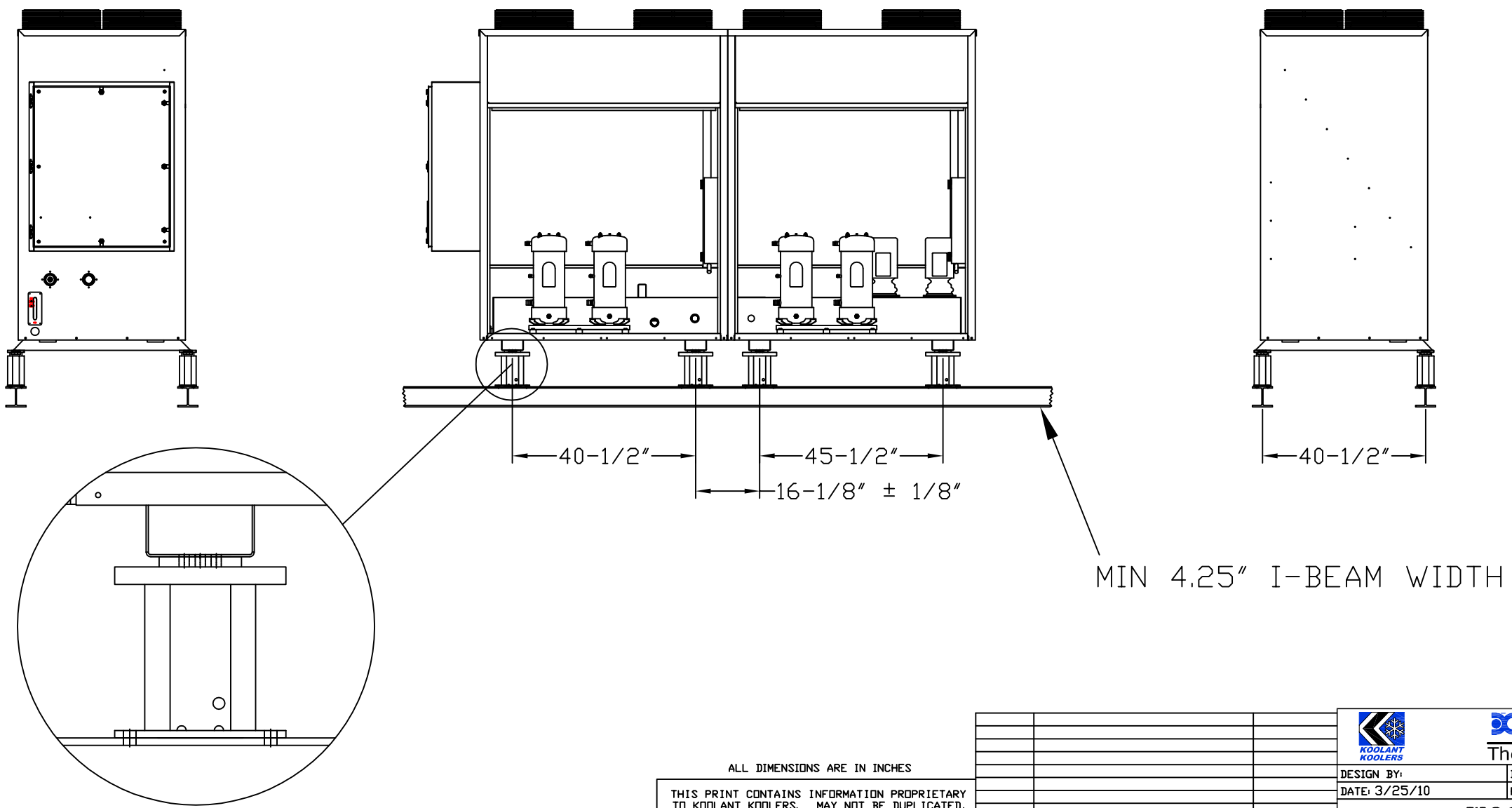

ALL DIMENSIONS ARE IN INCHES

THIS PRINT CONTAINS INFORMATION PROPRIETARY TO KOOLANT KOOLERS. MAY NOT BE DUPLICATED, REPRODUCED, OR SHARED IN ANY WAY WITHOUT THE EXPRESSED WRITTEN CONSENT OF KOOLANT KOOLERS.

CONFIDENTIAL AND PROPRIETARY

DATE	DESCRIPTION OF REVISION	APPROVED BY
04/02/10	UPDATED DIMENSION	CHW <B>
03/25/10	RELEASED DRAWING	MAR <A>

KOOLANT KOOLERS

Dimplex Thermal Solutions

SCHREIBER CHILLERS

DESIGN BY:

DRAWN BY:

DATE: 3/25/10

PAGE 1 OF 1

KALAMAZOO, MI.
PH (800) 968-5665
WWW.DIMPLEXTHERMAL.COM

W02-()-2P(-H)

MOUNTING LAYOUT

DRAWING NO. 444431