ECONOMIZER
OPERATING MANUAL
FREE COOLING OPTION

REVISION 1

Models

ECO30-GE-M

FOR USE WITH WO2-2-7500-2P-NF-L-M-R407C

ECO20-GE-M

FOR USE WITH WO2-2-5000-2P-NF-L-M-R407C

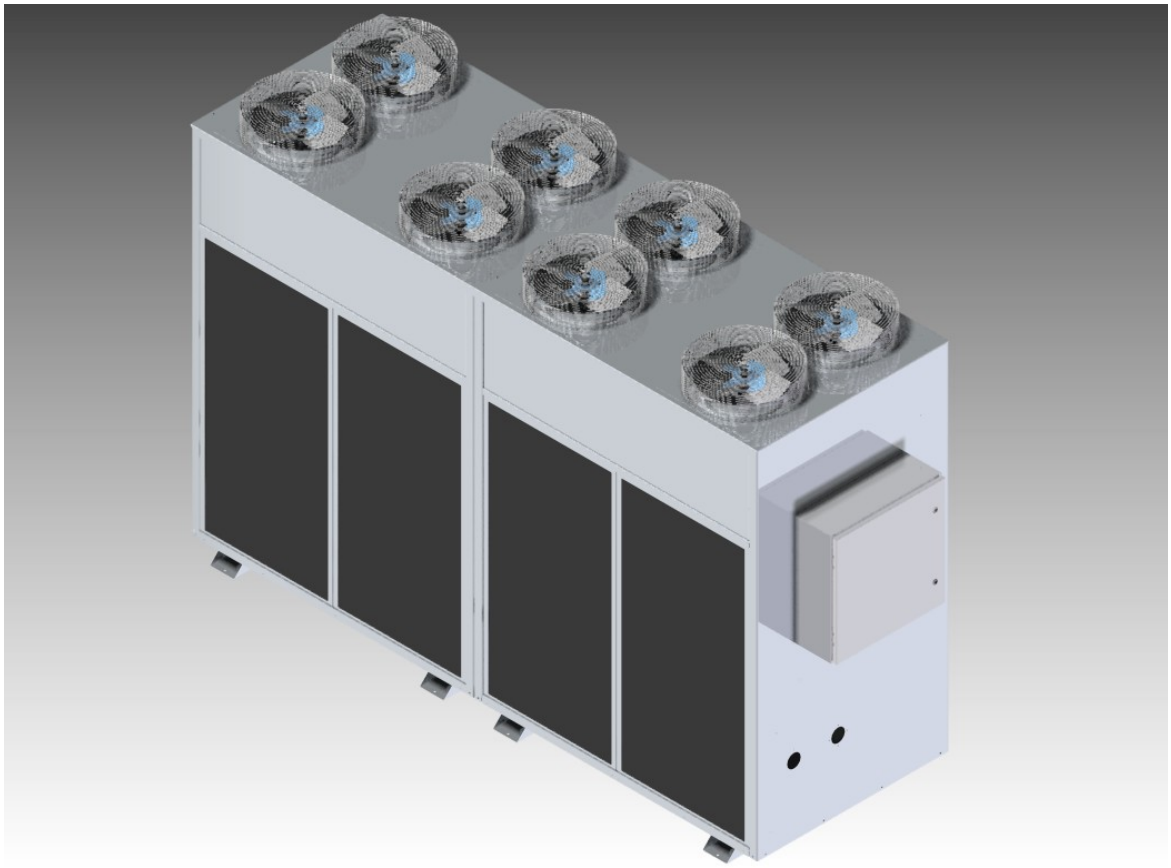

REVISION HISTORY

LEVEL	DATE	REVISION DESCRIPTION	SIGNATURES
1	4/2/10	DRAFT	

PRODUCT CONFIGURATIONS

GE PN	GE MODEL NUMBER	SUPPLIER MODEL NUMBER
E8911CE	ECO30-GE	ECO30-GE-M
E8912CE	ECO20-GE	ECO20-GE-M

Table of Contents

Article I. FOR YOUR SAFETY 5

Article II. INSTALLATION AND START-UP 6

Article III. CONTROLLER OPERATION 8

Section 3.01 Introduction: 8

Section 3.02 Initialization of Controller: 8

Section 3.03 Enabling the Economizer: 8

Section 3.04 Changing the Settings: 8

Section 3.05 Sequence of Operation: 9

Article IV. ECONOMIZER COMPONENTS 10

Article V. MAINTENANCE 11

Section 5.01 Fluid cooler coil: Cleaning Air Filters and Coil 11

Section 5.02 Electric Motors 11

Section 5.03 Inspect Fluid System for Leaks or Loose Connection 11

Section 5.04 Check All Wiring for Loose Connections, Chaffing or Damage 11

Article VI. ECONOMIZER SPECIFICATIONS 12

Article VII. TROUBLESHOOTING SERVICE GUIDE 13

Article VIII. SPARE PARTS GUIDE 14

Article IX. COMPONENT LITERATURE 15

Article X. DRAWINGS 32

Article I. FOR YOUR SAFETY

1. Signs and Symbols:

Throughout the operating manual, the information and notices below are identified by graphical symbols.

DANGER!
Safety note indicating imminent danger. Failure to heed the warning may result in serious bodily injury and even death.

CAUTION!
Safety note indicating the presence of potential hazard. Failure to heed the safety notice may result in minor bodily injury or damage to the equipment.

INFORMATION!
This symbol identifies important information or a useful tip concerning the application or service of the unit.

2. Safety Notes:

For the installation and operation of the Economizer, the following regulations and safety notes have to be observed.

Any work on the Economizer may only be performed by qualified personnel. All relevant accident prevention regulations have to be observed.

The eletro-technical connection of the Economizer must be performed according to all relevant national and local standards.

Before attempting to carry out any work on the Economizer, always disconnect the unit from the power supply.

Any national regulations applicable in the country of installation must be observed.

The fluid must comply with KOOLANT KOOLERS specifications. Watch for an incompatibilities of materials in the entire fluid circuit.

Article II. INSTALLATION AND START-UP

1) **Outdoor Use:** The Economizer is designed to be installed outdoors, space must be allowed around the Economizer to prevent local temperature build up. The Economizer can be located end to end or back to back relative to the Heat Exchanger or it can stand alone from Heat Exchanger.

2) **Leveling the Unit:** Make sure unit is placed, on a flat, level, hard surface. Economizer must be level or less than ½ inch of slope per 10 feet with the electrical box end of the Economizer at the high point. Use shims to correct level if needed. If a concrete slab is utilized, a 4 inch depth is adequate; pad should be at least 5 feet x 12 feet. If mounted on roof, two I-beams runners are typically provided to support feet at both ends. Economizer should be anchored from the feet mounting holes at the four corners of the machine. When mounted above occupied office space, optional vibration mounting springs can be used to mount the Economizer to reduce noise transmission, a spring mount will be provided for both ends of each foot.

3) **Proper Spacing:** The unit should be located where adequate air circulation is provided with room for servicing. As a general guideline for units with vertical air discharge (fans located on top), keep the unit at least *5 feet away from walls* and allow at least an *8 foot clearance above* the unit.[1] The side containing the *filter should be a minimum of 6 feet from the wall*. Avoid placing the Economizer under or near eves which may reflect the discharge air back into the air inlet[2]. Do not place in a poorly ventilated area. The build-up of high ambient temperatures can reduce the days of Economizer operation and reduce energy savings.[3]

4) **Connection of Water Piping:** The material and nominal widths of the pipes must be selected according to KOOLANT KOOLERS specifications. See dimensions in Article VI. Connect the fluid lines to the proper piping marked "*FLUID INLET TO ECONOMIZER*" and "*FLUID OUTLET FROM ECONOMIZER*". The return line from the HEC must connect to the "*FLUID INLET TO ECONOMIZER*" connection. The "*FLUID INLET TO ECONOMIZER*" connection must connect to the Heat Exchanger Fluid Inlet. The Economizer adds 8 psi of pressure drop to the system so equivalent pipe distances should be reduced to 300 feet to compensate for the added pressure drop.

5) **Voltage and Power:** Check building power to ensure it matches the Economizer rated voltage and current. Voltage and circuit ampacity of the unit can be found on the data tag which is located on the front of the electrical panel or the electrical drawings. Connect power leads to main disconnect[4].

---

[1] Do not place in a mezzanine, near a ceiling or in an enclosed room without consulting factory.
[2] Note: Placing Heat Exchanger under or near eves that can result in ice damage or damage to the eve as a result of hot air discharge.
[3] If there is a concern about adequate ventilation for the Heat Exchanger please consult the factory.
[4] Wiring should match Economizer disconnect size and power requirements in accordance with local codes.

6) **Control Wiring:** Connect the communication wiring from the Economizer terminal block to the Heat Exchanger terminal block as shown in Figure 1.

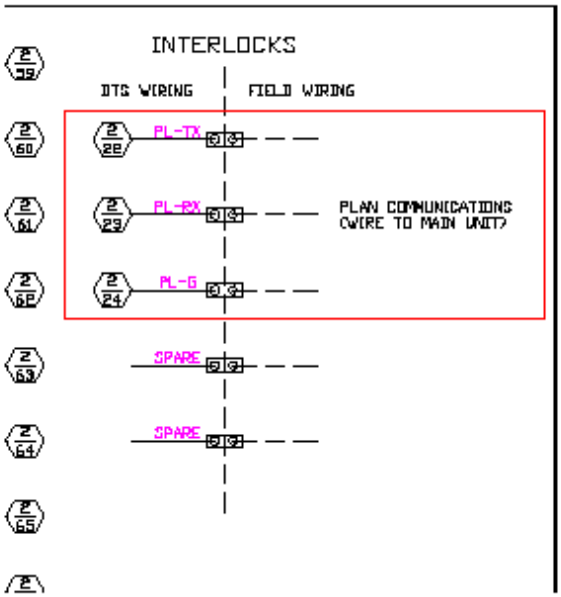

Figure 1

7) **Turn On Unit:** Once Economizer is connected the Economizer can be turned on. Enable the Economizer option in the Master Controller of the Heat Exchanger. See the **CONTROLLER OPERATION** for more information on operation of the master controller.

Caution: Electrical Shock Hazard – Use appropriate personal protective equipment rated for exposure to 460 volts when within 3 feet of open electrical enclosure.

8) Proceed to run Heat Exchanger pump for five minutes or more to allow any air in the system to be vented. Check fluid level in Heat Exchanger reservoir after air is purged from the piping. Fill reservoir as needed.

9) Check controller for fault messages. Clear faults that may have occurred during start-up procedure. If faults do not re-occur, the system is ready for continuous duty.

Article III. CONTROLLER OPERATION

Section 3.01 Introduction:

On the Economizer unit there is one controller that communicates with a master control in the Heat Exchanger. The Economizer status, settings and alarms can all be viewed and reset through the remote display that is mounted in the equipment room or operator room.

Section 3.02 Initialization of Controller:

When the unit is first powered up after a download it goes through a self-test and requires a reboot after initialization. Cycle power to the controller if the message in Figure 2 is displayed.

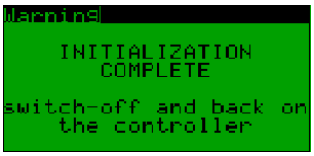

Figure 2

The master controller has an entry field in the Service submenu to enable the Economizer.

Section 3.03 Enabling the Economizer:

From the main menu press the "Prg" key, scroll down and to the Service menu and press the "Enter" key.

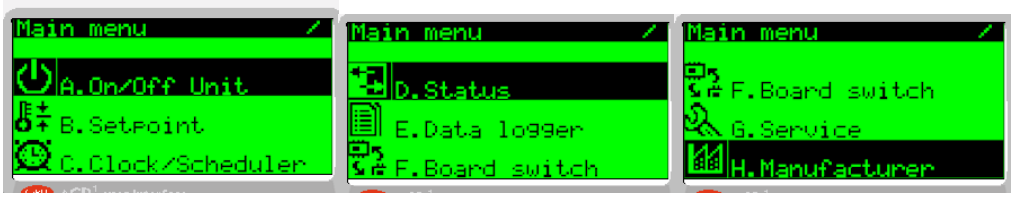

The next page will look similar to Figure 3. Press the "Enter" key again, to move the cursor over the "*No*". Press the up arrow key to change the status to "*Yes*"

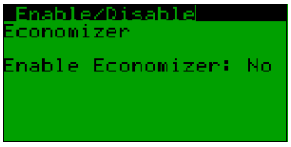

Figure 3

Section 3.04 Changing the Settings:

To configure the settings of the economizer go to the Service menu as described in Section 3.03. Highlight Thermoregulation and press "Enter". Use the arrow keys to scroll through the pages until the page similar to Figure 4 is shown. This contains the settings for the Economizer switch over setpoint and the number of fan sets. (See Section 3.05 for Sequence of Operations)

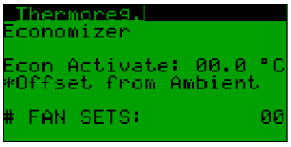

Figure 4

Once these have been set, press the down arrow to the next page and you should see something similar to what is shown in Figure 5. These are the PID settings which control the 3-way motorized valve and fans.

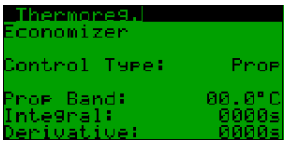

Figure 5

Once the settings are complete, the unit is ready for Economizer operation.

Section 3.05 Sequence of Operation:

The economizer will operate automatically when the return fluid temperature exceeds the economizer activation temperature (Ambient plus offset) then the motorized valve will begin to stroke open. If the economizer outlet temperature exceeds the Heat exchanger setpoint by more than 2°F then the motorized valve will stroke to full economizer mode and the fan will stage on to control the Heat exchanger outlet temperature to setpoint. The compressors will still activate to maintain Heat Exchanger outlet temperature setpoint. If the Economizer is active and the Economizer outlet temperature is within 2 degrees of Heat Exchanger outlet temperature setpoint then the compressors will be disabled.

Article IV. ECONOMIZER COMPONENTS

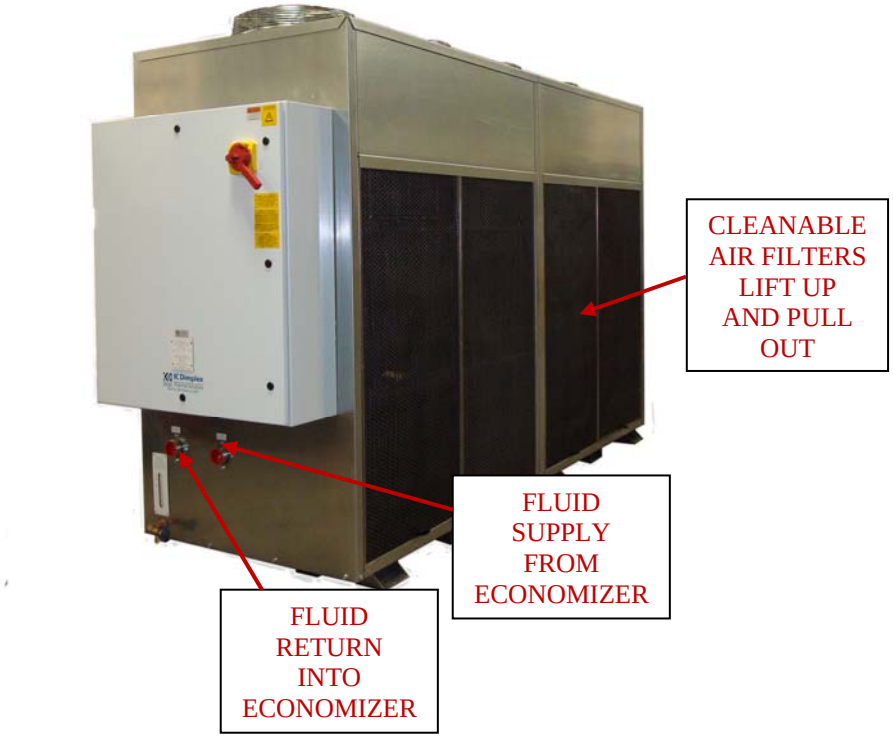

Economizer Overview 1

Article V. MAINTENANCE

The following maintenance procedures should be completed every 4 – 6 months:

Section 5.01 Fluid cooler coil: Cleaning Air Filters and Coil

In order for the Economizer to perform to its rated capacity, it is very important to keep the air flow at rated capacity. The coils are supplied with cleanable aluminum air filters, and it is very important that they be cleaned as necessary to maintain good airflow. Failing to do so will result in poor unit performance.

To clean the filters use a brush, compressed air or wash out with water. To clean the coil using compressed air, pressure must not exceed 30 psi. Blow air in the opposite direction of the air flow when Economizer is in operation.

Section 5.02 Electric Motors

Maintenance for electric motors is required only when these motors are furnished with grease fittings so they can be greased. If this is the situation, we recommend greasing every 6 months. Motors that have bearing noise should be replaced.

Section 5.03 Inspect Fluid System for Leaks or Loose Connection

Visually check fluid connections for any potential leaks in the system. Ensure there are no plumbing parts that show any significant wear including chaffing or cracking.

Section 5.04 Check All Wiring for Loose Connections, Chaffing or Damage

Turn off the main disconnect. Check all wiring inside of electrical panel and inside the Economizer unit for loose or damaged wires. Tighten any loose terminals and replace any damaged wires.

	***ECO20-GE* 460 volt**	***ECO30-GE* 460 volt**
Fan contactor power term.	22 lb-in	22 lb-in
Fan contactor control term.	8.9 to 13 lb-in	8.9 to 13 lb-in
Fused terminal	25 lb-in	25 lb-in
Disconnect terminal screw	55 lb-in	55 lb-in
Disconnect shaft set screw	12 lb-in	12 lb-in
Disconnect terminal shield screw	9 lb-in	9 lb-in
Fuse block terminal	35 lb-in	35 lb-in
Transformer Allen Bradley	10 lb-in	10 lb-in

Maintenance as you can see is minimal, but should you have a problem or situation not described above, please call our service department for assistance at (269) 349-6800.

Article VI. ECONOMIZER SPECIFICATIONS

Model Number:	ECO20-GE	ECO30-GE
Capacity	14 Tons	20 Tons
@ 50ºF Fluid	167,300 BTU/hr	240,000 BTU/hr
@ 30ºF Ambient	49kW	70 KW
Dimensions		
Height:	85”	85”
Width:	44”	44”
Depth:	138”	138”
Mechanical		
Fan:	½ hp x 4	½ hp x 8
Inlet:	2’ NPTF	2” MPT
Outlet:	2” NPTF	2” MPT
Weight:	1800 lbs – dry	1900 lbs – dry
	1900 lbs - operation	2000 lbs – operation
Electrical		
Voltage:	460V(+/-10%)/3/60Hz (+/-2Hz)	460V (+/-10%)/3/60Hz (+/-2Hz)
Voltage Imbalance	+/- 2 % max	+/- 2 % max
Disconnect Fuse:	15A	15A
FLA:	5A	10A
Fan FLA:	1.2A	1.2A
Max. Overcurrent Protect.	15A	15A
Min. Circuit Ampacity	10A	15A
Listings	NRTL LISTED TO UL1995(Standard)	NRTL LISTED TO UL1995(Standard)
	CUL 1995 (Canadian Sites)	CUL 1995 (Canadian Sites)

Article VII. TROUBLESHOOTING SERVICE GUIDE

SYMPTOMS	POSSIBLE CAUSE
Fans do not start	1. No power to economizer 2. Master Controller in Heat Exchanger is not powered 3. Economizer not enabled in Heat Exchanger master controller 4. Malfunction of fan motor 5. Ambient air temperature above economizer activation temperature
Unit does not make capacity	1. Air filters are dirty 2. Ambient temperature too high 3. Motorized valve not diverting fluid to coil 4. Lack of fluid flow through heat exchanger 5. Discharge air is deflected back into air inlet by surroundings

Article VIII. SPARE PARTS GUIDE

Detailed below is the recommended spare parts list for your Koolant Koolers Economizer. For current pricing on the parts listed, please contact the Dimplex Thermal Solutions parts department at (800) 968-5665.

DTS Guarantee: If any part purchased from this list fails to function within one year of the purchase date, due to a failure in the part, Dimplex Thermal Solutions will replace the stock part for no charge.

Koolant Koolers Model #: ECO20-GE-M

Part Description:	DTS PART #:	Qty:
***Air Filters**	**4300142**	**4**
***Fan Motor**	**4051311**	**1**
***Temperature Controller**	**4807776**	**1**
***Temperature Sensor**	**0611318**	**1**
***VG1841FT Valve**	**3647065**	**1**
AJT15 Fuse	3500909	2
ATDR1-1/2 Fuse	3500972	2
TRM10	3500091	1

***Core Components**

Koolant Koolers Model #: ECO30-GE-M

Part Description:	DTS PART #:	Qty:
***Air Filters**	**4300142**	**4**
***Fan Motor**	**4051311**	**1**
***Temperature Controller**	**4807776**	**1**
***Temperature Sensor**	**0611318**	**1**
***VG1841FT Valve**	**3647065**	**1**
AJT15 Fuse	3500909	2
ATDR1-1/2 Fuse	3500972	2
TRM10	3500091	1

***Core Components**

M9000-330 and M9000-340 Series Weather Shield Enclosures

Installation Instructions

Part No. 14-1330-26, Rev. A
Issued January 28, 2008
Supersedes March 16, 2007

Applications

The M9000-330 and M9000-340 Weather Shield Enclosures are cost-effective and durable weather shields designed to provide a degree of protection for a single Johnson Controls® M9000 Series Electric Actuator used in ball valve applications in conjunction with a M9000-51x Series Valve Linkage Kit. These weather shield enclosures are manufactured to National Electrical Manufacturers' Association (NEMA) 3R specifications and protect the electric actuator from corrosion, rain, freezing rain, sleet, and snow. The enclosure can be mounted indoors or outdoors; however, it may not prevent externally formed ice from restricting the motion of the rotary shaft.

Each enclosure is constructed of impact-grade ABS plastic that provides excellent impact resistance. The cover features ultraviolet inhibitors that extend service life by preventing the cover from becoming brittle or damaged by the sun or other environmental elements. The transparent cover provides an unobstructed view of the electric actuator without having to disassemble the enclosure. An appliance cord (for the M9000-330 model) enables installation of control wiring, and a form-fitting seal prevents water or moisture from entering the unit and damaging the actuator.

IMPORTANT: The M9000-330 and M9000-340 Weather Shield Enclosures only provide protection for the Johnson Controls M9000 Series Electric Actuator used in ball valve applications. To ensure proper operation, check that all associated equipment used in the application is suitable for the surrounding environment.

Installation

Refer to the following documentation for more information on the M9000 Series Electric Actuators and Valve Linkages used with the M9000-330 and M9000-340 Weather Shield Enclosures:

- *M9108, M9116, M9124, and M9132 Series Electric Non-Spring Return Actuators Installation Instructions (Part No. 34-636-399)*
- *M9210-Bxx-3 On/Off Electric Spring Return Actuators Installation Instructions (Part No. 34-636-1638)*
- *M9210-GGx-3 Proportional Electric Spring Return Actuators Installation Instructions (Part No. 34-636-1662)*
- *M9220-AGx-3 Floating Electric Spring Return Actuators Installation Instructions (Part No. 34-636-1689)*
- *M9220-Bxx-3 On/Off Electric Spring Return Actuators Installation Instructions (Part No. 34-636-1239)*
- *M9220-GGx-3 Proportional Electric Spring Return Actuators Installation Instructions (Part No. 34-636-1697)*
- *M9000-51x Series Valve Linkage Kits Installation Instructions (Part No. 14-1201-13)*

Johnson Controls

Parts Included

Table 1: Parts Included in M9000-330 and M9000-340 Weather Shield Enclosure Kits

Quantity		Description
M9000-330[1]	**M9000-340[1]**	
1	**1**	Enclosure Base and Seal Assembly
1	**1**	Cover and Gasket
4	**4**	Cover Screw
1	**1**	Anti-Rotation Bracket
1	**1**	Weather Shield Enclosure Mounting Plate
2	**4**	M4 Plain Washer
2	**4**	M3-0.5 x 8 mm Machine Screw
4	**–**	#6-32 x 1/2 in. Fillister Screw
4	**–**	#6-32 Serrated Nut
–	**4**	#10-32 x 1-3/4 in. Fillister Screw
–	**4**	#10-32 Serrated Nut
3	**4**	M5 x 16 Serrated Hex Screw
3	**4**	M5 Serrated Nut
2	**2**	Terminal Block, 4 Position, Pluggable, 26-12 AWG
2	**2**	Terminal Block, 3 Position, Pluggable, 26-12 AWG
2	**2**	Strain Relief Conduit Fittings with 1/2 in. National Pipe Straight Mechanical (NPSM) Exit[2]
1	**1**	Cap, Plug
–	**1**	M9210/M9220 Actuator Stand-off
1	**–**	Appliance Cord - 6 Conductor, 18 AWG Wire Gauge, 43 in. (109 cm)

1. This kit does not include the M9000-51x Series Valve Linkage Kit (Figure 2). This item must be ordered separately.
2. It is recommended that 1/2 in. liquid-tight conduit and 1/2 in. National Pipe Thread (NPT) liquid-tight fittings (purchased locally) be used to terminate the control wiring to the weather shield enclosure strain relief conduit fittings.

Dimensions

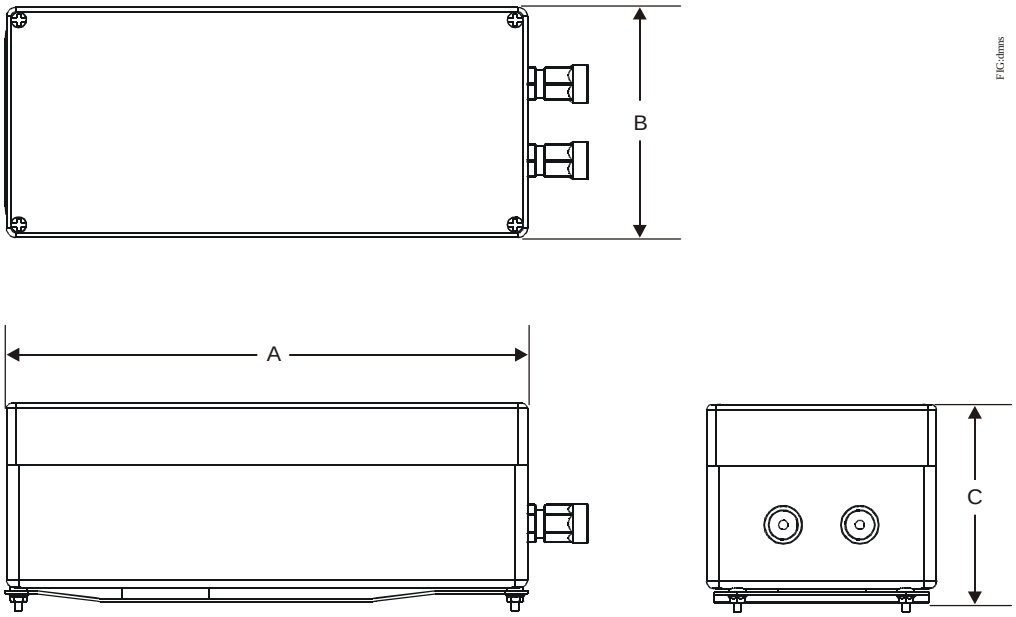

Figure 1: Weather Shield Enclosure Dimensions, in. (mm)
(See Table 2.)

Table 2: Weather Shield Enclosure Dimensions, in. (mm)

Dimension	Weather Shield Enclosure	
	M9000-330	**M9000-340**
A	7-7/8 (200)	13-3/8 (340)
B	4-23/32 (120)	5-29/32 (150)
C	3-29/32 (99)	5-1/16 (129)

Mounting

The M9000-330 and M9000-340 Weather Shield Enclosure Kits are shipped from the factory partially assembled, with the cover held in place using the four cover screws included with the kit. The remainder of the parts required for mounting can be found inside the enclosure.

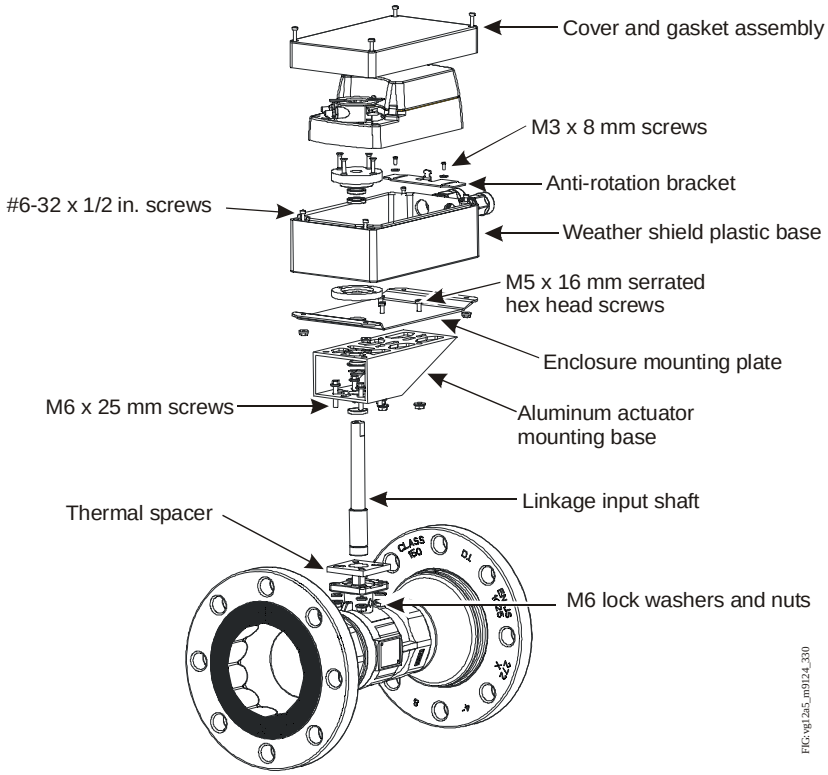

Figure 2: Exploded View of VG12A5 Series Flanged Ball Valve with M9124 Non-Spring Return Actuator and M9000-330 Weather Shield Kit

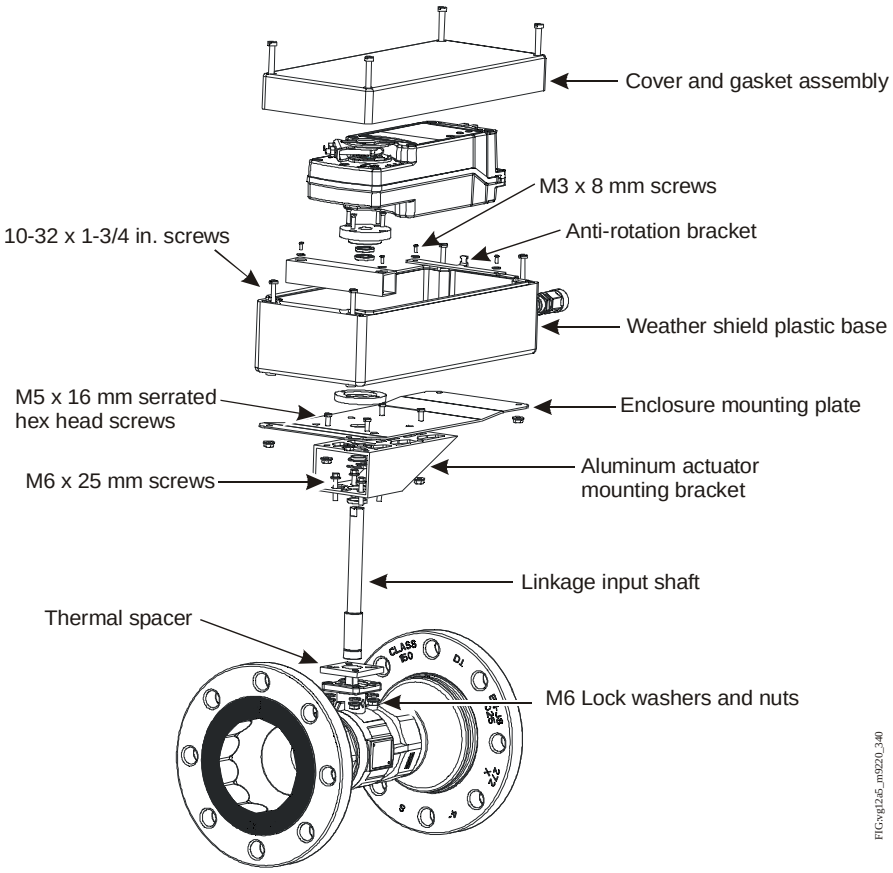

Figure 3: Exploded View of VG12A5 Series Flanged Ball Valve with M9220 Spring Return Actuator and M9000-340 Weather Shield Kit

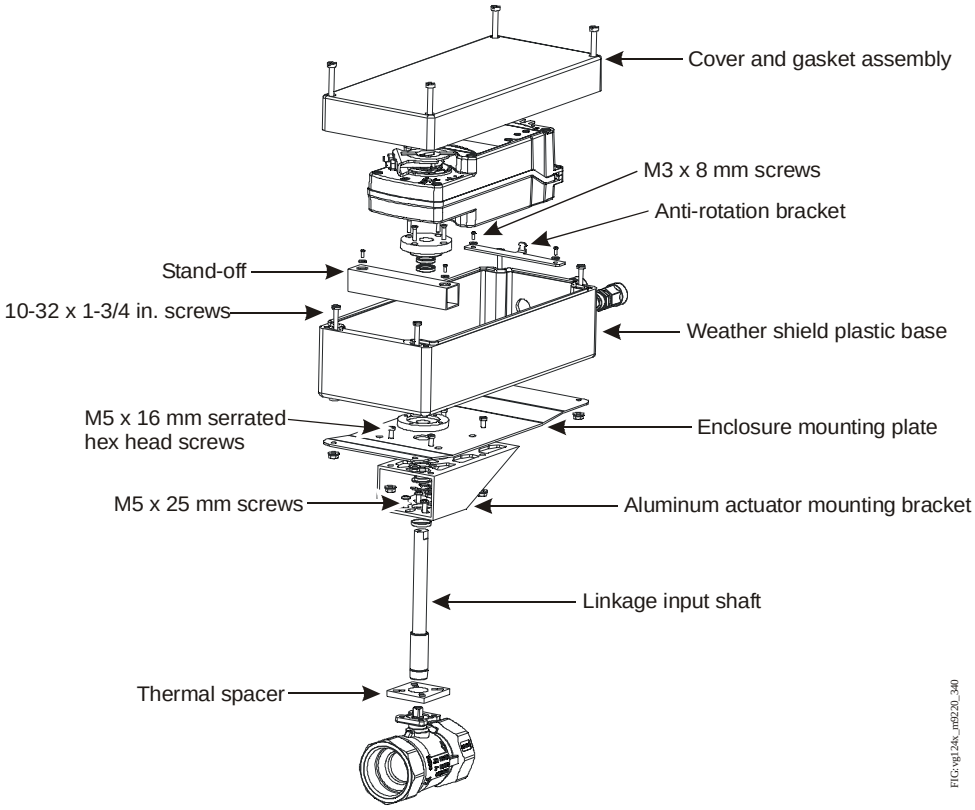

Figure 4: Exploded View of VG124x Series NPT Threaded Ball Valve with M9220 Spring Return Actuator and M9000-340 Weather Shield

Mount the weather shield enclosure onto the M9000-51x Series Valve Linkage as follows:

1. Loosen the four cover screws using a No.1 Phillips screwdriver, and remove the cover assembly from the enclosure base.
2. Insert the small brass expanding inserts into the weather shield plastic base as indicated on Figure 5 to provide threading for M3 screws.
3. Orient the anti-rotation bracket onto the enclosure as illustrated in Figure 5.

Note: The anti-rotation bracket must be oriented properly in order for the anti-rotation tab to align with the slot on the electric actuator.

4. Secure the anti-rotation bracket and the actuator standoff (standoff is for M9000-340 only) to the threaded brass inserts of the enclosure base using four M3 x 8 mm Phillips screws and M4 washers included with the kit. Tighten the Phillips screws to a torque of 5 to 8 lb·in (0.57 to 0.90 N·m).

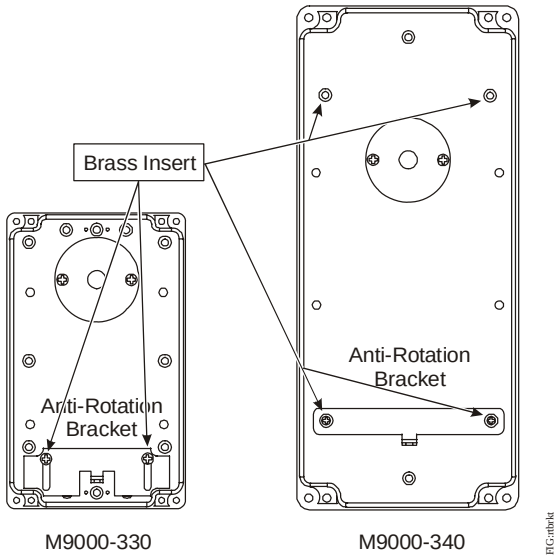

Figure 5: Proper Orientation of the Anti-Rotation Bracket

5. Place the thermal spacer on top of the ball valve mounting flange aligning the holes in the thermal spacer with the mounting holes of the valve. The inner holes of the thermal spacer are used for 1/2 through 2 in. ball valves and the outer holes are used for the 2-1/2 through 4 in. flanged ball valves.
6. Mount the aluminum actuator mounting bracket to the thermal spacer and ball valve using either the four M5 x 25 mm or M6 x 25 mm screws. For some models, this may require the use of the four M5 or M6 serrated hex nuts.
7. Mount the linkage plate to the mounting bracket using the M5 x 16 mm serrated hex head screws and M5 serrated nuts. Hand tighten only to allow the linkage plate to be aligned with the weather shield plastic base as in Step 8. The M9000-330 kit has three screws and the M9000-340 kit has four screws.
8. Install the weather shield plastic base over the linkage input shaft. Move linkage plate until the holes in the weather shield base align with the holes in the linkage mounting plate. Remove the weather shield plastic base and tighten the M5 screws to torque of 41 to 45 lb·in (4.6 to 5.1 N·m).
9. Replace the weather shield plastic base over the linkage input shaft and secure to the linkage plate using the #6-32 x 1/2 in. screws and #6-32 serrated hex nuts (M9000-330 kit) or the #10-32 x 1-3/4 in. screws and the #10-32 serrated hex nuts (M9000-340 kit) using a torque of 21 to 25 lb·in (2.4 to 2.8 N·m).
10. Install the two conduit fittings included with the kit into the enclosure base and secure them in place using the threaded hex nuts.

IMPORTANT: The conduit fittings must be installed properly to ensure a tight seal. Water or moisture may damage or affect the operation of the electric actuator within the enclosure.

11. For the M9000-330 kit, insert the appliance cord into one of the conduit fittings so that the cable wrapping is visible inside the enclosure. For the M9000-340 kit, feed the appliance cord(s) of the actuator through the conduit fittings.
12. Install the actuator to the enclosure/linkage assembly. Insert the actuator anti-rotation slots over the anti-rotation tab of the bracket from Step 4.
13. Center the shaft in the actuator hub. Secure the actuator coupler assembly to the shaft following the actuator mounting instructions.

Note: Refer to the documentation included with the electric actuator and valve linkage for complete installation instructions.

14. Tighten the conduit fitting to a torque of 10 to 15 lb·in (1.1 to 1.7 N·m) to secure the appliance cord in place.
15. Reinstall the cover and gasket assembly and secure it in place using the four cover screws included with the kit. Tighten the cover screws to a torque of 5 to 8 lb·in (0.6 to 0.9 N·m).
16. If one of the conduit fittings remains unused, seal the fitting using the cap plug included with the enclosure kit.

Repair Information

If the M9000-330 or M9000-340 Series Weather Shield Enclosure fails to operate within its specifications, replace the unit. For a replacement weather shield, contact the nearest Johnson Controls representative.

Technical Specifications

M9000-330 and M9000-340 Weather Shield Enclosures

Materials	**Enclosure**	Impact-Grade ABS Plastic
	Enclosure Seal	Nitrile
	Cover	Transparent Impact-Grade ABS Plastic with Ultraviolet Inhibitors
	Cover Gasket	Neoprene
Weather Shield Rating		NEMA 3R, IP54
Actuator Ambient Operating Temperature Limits	**M9108, M9116, M9124, and M9132**	-4 to 122°F (-20 to 50°C)
	M9210 and M9220	-40 to 131°F (-40 to 55°C)
Weather Shield Enclosure Ambient Storage Temperature Limits		-40 to 176°F (-40 to 80°C)
Electrical Connections		Strain Relief Conduit Fittings with 1/2 in. National Pipe Straight Mechanical (NPSM) Exit
Shipping Weight	**M9000-330**	3.2 lb (1.45 kg)
	M9000-340	4.2 lb (1.9 kg)

The performance specifications are nominal and conform to acceptable industry standards. For application at conditions beyond these specifications, consult the local Johnson Controls office. Johnson Controls, Inc. shall not be liable for damages resulting from misapplication or misuse of its products.

Building Efficiency
507 E. Michigan Street, Milwaukee, WI 53202

Metasys® and Johnson Controls® are registered trademarks of Johnson Controls, Inc.
All other marks herein are the marks of their respective owners. © 2008 Johnson Controls, Inc.

Published in U.S.A. www.johnsoncontrols.com

VG1000 Series Forged Brass Ball Valves

Product Bulletin

Code No. LIT-977132
Issued January 22, 2007
Supersedes March 20, 2006

VG1000 Series Ball Valves are designed to regulate the flow of hot or chilled water and, for some models, low pressure steam in response to the demand of a controller in Heating, Ventilating, and Air Conditioning (HVAC) systems. Available in sizes 1/2 through 2 in. (DN15 through DN50), this family of two-way and three-way forged brass valves is factory or field mounted to Johnson Controls® VA9104, M9106, M9109, and M9100 Series Non-Spring Return and VA2202, M9206, and M9210 Series Spring Return Electric Actuators for on/off, floating, or proportional (Prop.) control.

Figure 1: VG1000 Series Ball Valves Shown with Factory-Mounted M9000 Series Electric Actuators

Table 1: Features and Benefits (Part 1 of 2)

Features	Benefits
Forged Brass Body	Provides 580 psig static pressure rating
Amodel® Flow Characterizing Disk	Maintains equal percentage flow characteristics for best temperature control, available in a wide variety of Cvs to cover a broad range of applications
200 psi Closeoff Pressure Rating	Provides tight shutoff
Chrome-Plated Brass Ball and Stem Assembly Standard	Handles both chilled water and hot water applications with a fluid temperature range of 23 to 203°F (-5 to 95°C)
300 Series Stainless Steel Ball and Stem Assembly Available	Tolerates high temperature water or 15 psi saturated steam with fluid temperatures of -22 to 284°F (-30 to 140°C) or where a higher degree of corrosion protection is desired
500:1 Rangeability	Provides accurate control under all load conditions
Ethylene Propylene Diene Monomer (EPDM) Double O-Ring Stem Seal	Provides a leak-free seal; the packing has been tested and is leak-free after 200,000 cycles in iron-oxide contaminated water
Graphite-Reinforced Polytetrafluoroethylene (PTFE) Seats	Include 15% graphite-reinforced ball seals, providing better wear resistance
Blowout-Proof Stem	Protects the user from the risk of injury

Table 1: Features and Benefits (Part 2 of 2)

Features	Benefits
Maintenance-Free Design	Performs without failure in excess of 200,000 full stroke cycles in iron-oxide contaminated water
Wide Selection of Styles for a Variety of Applications	Offers various valve configurations including two-way and three-way full port and reduced port models in chrome plated brass and stainless steel trim
Available with Factory-Mounted VA9104, M9106, M9109, VA2202, M9206, or M9210 Series Electric Actuators	Reduces installation time, thus reducing overall installation cost
M9000-520 Linkage Kit Available for Field Mounting to M9106, M9109, or M9206 Series Electric Actuators	Reduces installation time, thus reducing overall installation cost; provides superior thermal isolation between the valve and actuator
M9000-550 Linkage Kit Available for Field Mounting to M9104 Series Electric Actuators	Lowers both space requirements and total cost by providing high thermal isolation in a compact size

Table 16: Shipping Weights, lb (kg)[1]

Valve Code Number	Description	Shipping Weight, lb (kg)
VG124xAx	1/2 in. (DN15) Two-Way Forged Brass Ball Valve, Threaded (NPT) End Connections	0.8 (0.36)
VG124xBx	3/4 in. (DN20) Two-Way Forged Brass Ball Valve, Threaded (NPT) End Connections	1.0 (0.45)
VG124xCx	1 in. (DN25) Two-Way Forged Brass Ball Valve, Threaded (NPT) End Connections	0.8 (0.36)
VG124xDx	1-1/4 in. (DN32) Two-Way Forged Brass Ball Valve, Threaded (NPT) End Connections	2.3 (1.04)
VG124xEx	1-1/2 in. (DN40) Two-Way Forged Brass Ball Valve, Threaded (NPT) End Connections	3.8 (1.73)
VG124xFx	2 in. (DN50) Two-Way Forged Brass Ball Valve, Threaded (NPT) End Connections	5.0 (2.3)
VG184xAx	1/2 in. (DN15) Three-Way Forged Brass Ball Valve, Threaded (NPT) End Connections	1.25 (0.57)
VG184xBx	3/4 in. (DN20) Three-Way Forged Brass Ball Valve, Threaded (NPT) End Connections	1.5 (0.68)
VG184xCx	1 in. (DN25) Three-Way Forged Brass Ball Valve, Threaded (NPT) End Connections	2.75 (1.25)
VG184xDx	1-1/4 in. (DN32) Three-Way Forged Brass Ball Valve, Threaded (NPT) End Connections	4.25 (1.93)
VG184xEx	1-1/2 in. (DN40) Three-Way Forged Brass Ball Valve, Threaded (NPT) End Connections	6.25 (2.84)
VG184xFx	2 in. (DN50) Three-Way Forged Brass Ball Valve, Threaded (NPT) End Connections	8.2 (3.7)

1. For VA9104 Series Actuated Non-Spring Return Valve Assemblies, add 2.0 lb (0.9 kg); for M9106 and M9109 Series Actuated Non-Spring Return Valve Assemblies, add 3.4 lb (1.5 kg); for VA2202 Series Actuated Spring Return Valve Assemblies, add 2.0 lb (0.9 kg); for M9206 Series Actuated Spring Return Valve Assemblies, add 4.5 lb (2.0 kg); for M9100 Series Actuated Non-Spring Return Valve Assemblies, add 4.4 lb (2.0 kg); for M9210 Series Actuated Valve Assemblies, add 7.9 lb (3.6 kg).

Application Overview

Available in sizes 1/2 through 2 in. (DN15 through DN50), VG1000 Series Ball Valves are designed specifically for automated commercial HVAC service. These valves feature a forged brass body with either a chrome plated brass ball for water or glycol solutions to 203°F (95°C), or a 300 Series stainless steel ball for high temperature water to 284°F (140°C) and saturated steam to 15 psi. The Amodel Flow Characterizing Disk maintains equal percentage Flow Characteristics for optimum temperature control, as shown in Figure 2.

The blowout-proof stem and mounting flange, combined with an innovative double O-ring stem seal and self-centering stem bushing design, shown in Figure 7, provide quick and easy electric actuator field mounting while ensuring long life and leak-free valve performance. The specially engineered, graphite-reinforced PTFE seat with flexible PTFE seat design (backed with Ethylene Propylene Diene Monomer [EPDM] O-rings) significantly reduces the operating torque, allowing the smallest possible electric actuator available to provide the force required for the specific application. All valve and actuator assemblies provide 200 psig (1,379 kPa) closeoff pressure while ensuring operation after long idle periods.

Note: The VG1243 valve and actuator assembly provides 150 psig (1,034 kPa) closeoff pressure.

VG1000 Series Ball Valves are designed for factory or field mounting to Johnson Controls VA9104, M9104 (field mounting only), M9106, M9109, and M9100 Series Non-Spring Return, and VA2202, M2202, M9206, and M9210 (field mounting only) Series Spring Return Electric Actuators. Field actuator-to-valve coupling requires an M2000-500, M9000-51x, M9000-520, or M9000-550 Valve Linkage Kit except for the direct mount VA9104 and VA2202 actuators. See Table 17 for valid valve, actuator, and linkage combinations.

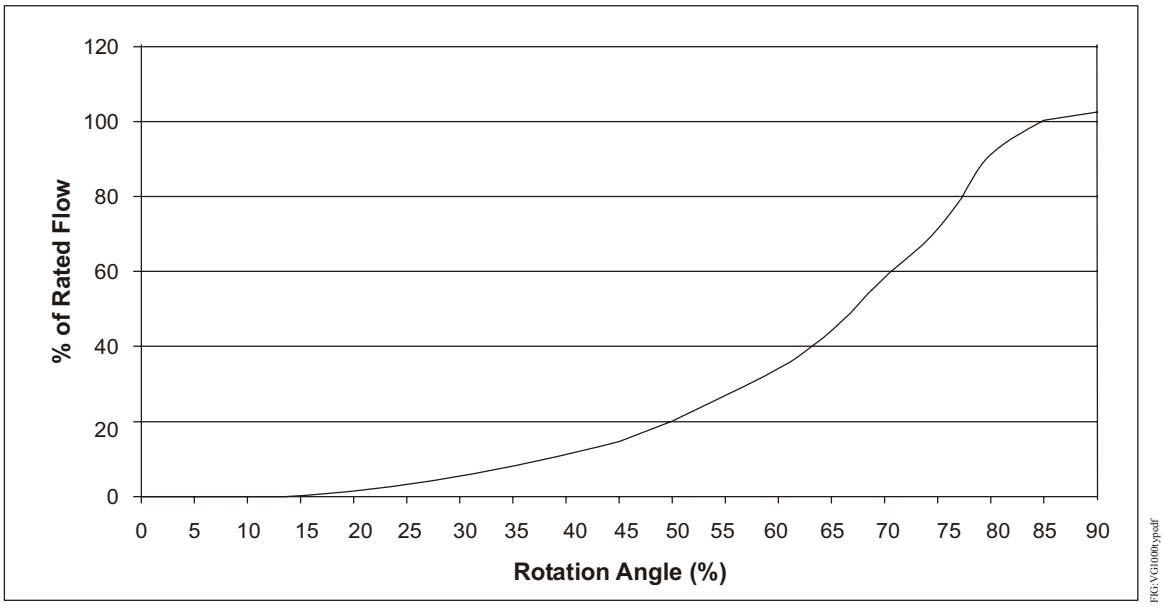

Figure 2: Typical Two-Way VG1000 Series Ball Valve with Characterizing Disk Flow

See Figure 3 for typical VG1000 internal composition.

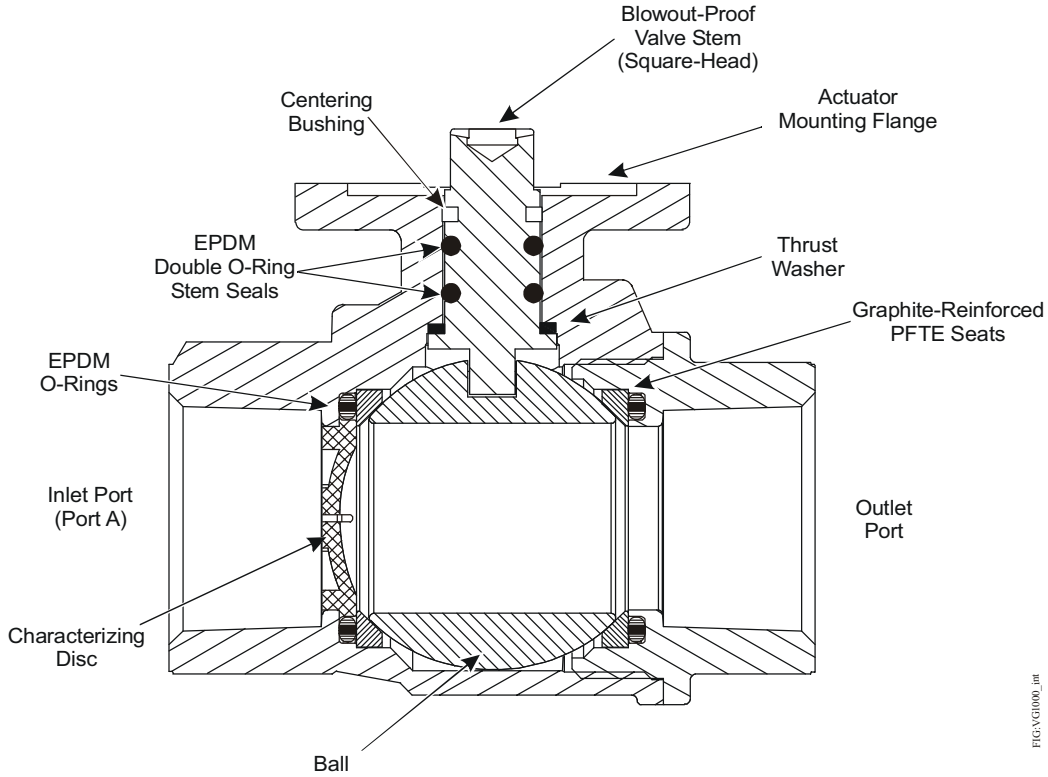

Figure 3: Internal View of a Typical VG1000 Series Ball Valve

See Figure 4 for typical piping applications.

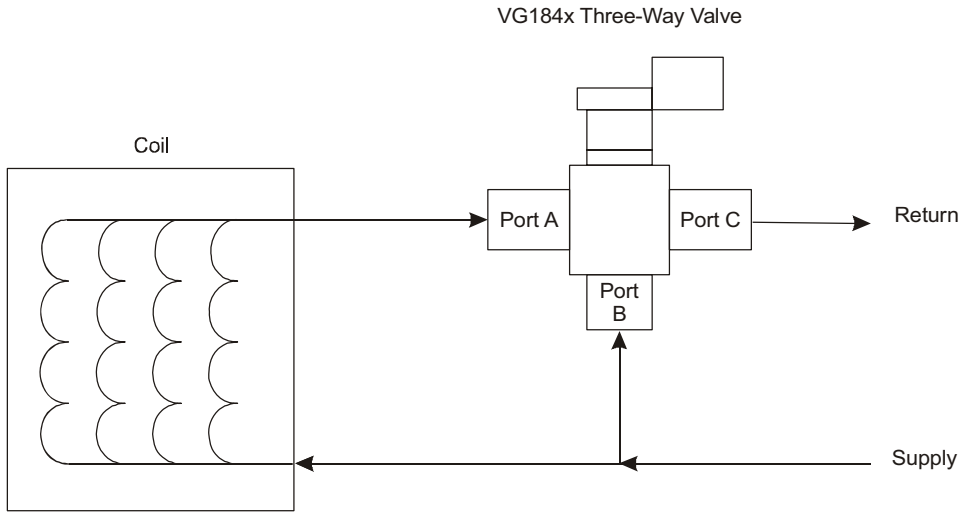

Typical Three-Way Ball Valve Application

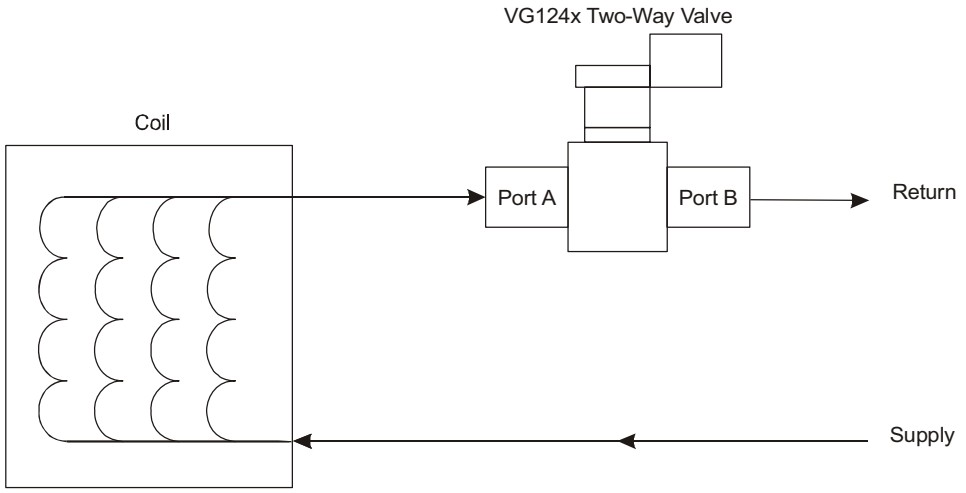

Typical Two-Way Ball Valve Application

FIG:VG1000_typpip

Note: Mount the valve downstream from the coil to minimize heat transfer to the actuator.

Figure 4: Typical VG1000 Piping

IMPORTANT: The VG1000 Series Valves are intended to control saturated steam, hot water, and chilled water flow under normal equipment operating conditions. Where failure or malfunction of the VG1000 Series Valve could lead to personal injury or property damage to the controlled equipment or other property, additional precautions must be designed into the system. Incorporate and maintain other devices such as supervisory or alarm systems or safety or limit controls intended to warn of, or protect against, failure or malfunction of the VG1000 Series Valve.

Electric Actuator Control Signal Action

Two-way VG1000 Series Ball Valves are fully open when the electric actuator is fully Counterclockwise (CCW) and fully closed when the electric actuator is fully Clockwise (CW). For three-way valves, the Port A and common port are fully open when the electric actuator is fully CCW as shown in Figure 5. Port B and common port are fully open when the actuator is fully CW as shown in Figure 6.

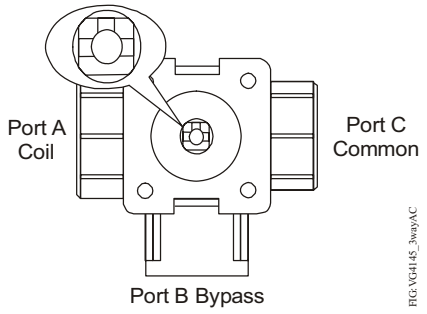

Figure 5: VG1841 or VG1845 Series Three-Way Ball Valve (Port A Connected to Port C)

Note: VG1841 and VG1845 three-way ball valves have a different port configuration (as shown in Figure 5 and Figure 6) from the older VG1644 Series three-way ball valves (Figure 7), and you must change the piping to convert them to the new series of valves.

For non-spring return and spring-to-open proportional control models in the direct-acting mode, a minimum control signal drives the electric actuator to the fully CCW position while a maximum control signal drives the electric actuator to the fully CW position.

For spring-to-close proportional control models in the direct-acting mode, a minimum control signal drives the electric actuator to the fully CW position while a maximum control signal drives the electric actuator to the fully CCW position.

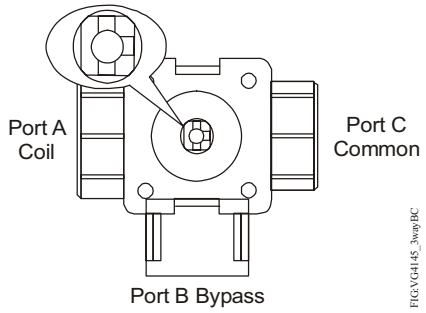

Figure 6: VG1841 or VG1845 Series Three-Way Ball Valve (Port B Connected to Port C)

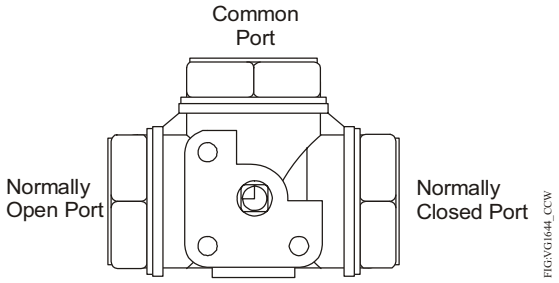

Figure 7: Top View of VG1644 Series Three-Way Ball Valve (Actuator Fully CCW)

For non-spring return floating or on/off (floating) control models, a control signal to Terminal 2 (or wire 2) of a VA9104 or an M91xx Series Actuator, drives the electric actuator to the fully CW position. Likewise, a control signal to Terminal 3 (or wire 3) of a VA9104 or an M91xx Series Actuator drives the electric actuator to the fully CCW position.

For spring return floating control VA2202 models with the actuator mounted with the blue housing facing away from the valve (actuator spring returns fully CCW) and the direction of the rotation switch in the CW position, a control signal to the Orange Wire drives the electric actuator to the fully CW position. Likewise, a control signal to the White Wire drives the valve to the fully CCW position.

If the VA2202 actuator is reversed so the gray housing is away from the valve (actuator spring returns fully CW) and the direction of the rotation switch in the CCW position, then a control signal to the Orange Wire drives the electric actuator to the fully CCW position. Likewise, a control signal to the White Wire drives the valve to the fully CW position.

A control signal to Wire 3 of a CCW-face (mounted away from the valve) M9206 Series or M9210 Series actuated spring-to-open valve assembly drives the electric actuator to the fully CW position. Likewise, a control signal to Wire 4 of a floating CCW-face M9206 Series or M9210 Series Actuator, or removal of the control signal from Wire 3 of an on/off CCW-face M9206 Series or M9210 Series actuated spring-to-open valve assembly drives the electric actuator to the fully CCW position.

A control signal to Wire 3 of a CW-face (mounted away from the valve) M9206 Series or M9210 Series actuated spring-to-close valve assembly drives the electric actuator to the fully CCW position. Likewise, a control signal to Wire 4 of a floating CW-face M9206 Series or M9210 Series Actuator, or removal of the control signal from Wire 3 of an on/off CW-face M9206 Series or M9210 Series actuated spring-to-close valve assembly drives the electric actuator to the fully CW position.

Electric Actuator Selection

VG1000 Series Ball Valves are designed for factory or field mounting to Johnson Controls VA9104, M9104 (field mounting only), M9106, M9109, and M9100 Series Non-Spring Return, and VA2202, M2202, M9206, and M9210 (field mounting only) Series Spring Return Electric Actuators. Field actuator-to-valve coupling requires an M2000-500, M9000-51x, M9000-520, or M9000-550 Valve Linkage Kit except for the direct mount VA9104 and VA2202 actuators. See Table 17 for valid valve, actuator, and linkage combinations.

Note: To avoid excessive wear or drive time on the motor for VA9104, M9104, M9106, and M9109 AGx models, use a controller and/or software that provides a timeout function to remove the signal at the end of rotation (stall). The IGx and GGx models have an auto shutoff to avoid excessive wear or drive time on the motor.

For more information on these electric actuator series as well as details on models available, refer to the following documents:

- *VA9104-xGA-2S, 3S Series Electric Non-Spring Return Valve Actuators Product Bulletin (LIT-12011050)*
- *M9104-xGx-2S, -3S and M9104-xGA-2S Series Electric Non-Spring Return Actuators Product Bulletin (LIT-1201742)*
- *VA2202-xxx-2 Series Electric Valve Actuators Product Bulletin (LIT-12011160)*
- *M2202-xxx-2 Series Electric Spring Return Actuators Product Bulletin (LIT-12011159)*
- *M9106-xGx-2 Series Electric Non-spring Return Actuators Product Bulletin (LIT-2681123)*
- *M9109 Series Electric Non-spring Return Actuators Product Bulletin (LIT-120112)*
- *M9206 Series Electric Spring Return Actuators Product Bulletin (LIT-2681118)*
- *M9206-xxx-2S Series Electric Spring Return Actuators Product Bulletin (LIT-1201791)*
- *M9108, M9116, M9124, and M9132 Series Electric Non-spring Return Actuators Product Bulletin (LIT-2681058)*
- *M9210-xxx-3 Electric Spring Return Actuators Product Bulletin (LIT-12011056)*

Linkage Kit Selection

The M9000-51x, M9000-520, M9000-550, and M2000-500 Valve Linkage Kits are designed specifically for field mounting Johnson Controls M9104, M9106, M9109, and M9100 Series Non-Spring Return, and M2000, M9206, and M9210 Series Spring Return Electric Actuators to VG1000 Series Ball Valves. See Table 17 for valid valve, actuator, and linkage combinations.

For more information on the M9000-520 Linkage Kit, refer to the *M9000-520 Ball Valve Linkage Kit Product Bulletin (LIT-1201547)* or the *M9000-520 Ball Valve Linkage Kit Installation Instructions (Part No. 14-1297-5)*.

For more information on the M9000-51x Valve Linkage Kits, refer to the *M9000-51x Series Valve Linkage Kits Product Bulletin (LIT-977354)* or the *M9000-51x Series Valve Linkage Kits Installation Instructions (Part No. 14-1201-13)*.

For more information on the M9000-550 Linkage Kit, refer to the *M9000-550 Ball Valve Linkage Kit Installation Instructions (Part No. 34-636-1816)*.

For more information on the M2000-500 Linkage Kit, refer to the *M2000-500 Ball Valve Linkage Kit Installation Instructions (Part No. 14-1343-7)*.

Technical Specifications

VG1000 Series Forged Brass Ball Valves (Part 1 of 2)

Service[1]		Hot Water, Chilled Water, 50/50 Glycol Solutions, and 15 psig (103 kPa) Saturated Steam for HVAC Systems
Valve Fluid Temperature Limits	Water	**VG1241 and VG1841 Series:** 23 to 203°F (-5 to 95°C) **VG1245 and VG1845 Series**: 22 to 284°F (-30 to 140°C) **VG1243 Series:** 35 to 250°F (2 to 121°C)
	Steam	**VG1245 and VG1243 Series:** 15 psig (103 kPa) at 250°F (121°C) **VG1241 Series:** Not Rated for Steam Service
Maximum Actuator Fluid Temperature Limit	VA9104	212°F (100°C)
	M9104 with M9000-550 Linkage	
	VA2202	
	M2202 with M2000-500 Linkage	
	M9106, M9109 or M9206 with M9000-520 Linkage	284°F (140°C)
	M9210 with M9000-517 Linkage	
Valve Body Pressure Rating	Water	580 psig (3,996 kPa) (PN40)
	Steam	15 psig (103 kPa) Saturated Steam
Maximum Closeoff Pressure		**VG1241 and VG1245 Series:** 200 psig (1,378 kPa) **VG1243 Series:** 150 psig (1,034 kPa)
Maximum Recommended Operating Pressure Drop		50 psi Maximum Differential Pressure for Valves with Characterized Flow Control Disk and 30 psi Maximum for Quiet Service Ball Valves
Flow Characteristics	Two-Way	Equal Percentage
	Three-Way	Equal Percentage Flow Characteristics of In-line Port A (Coil) and Linear Flow Characteristics of Angle Port B (Bypass)
Rangeability[2]		Greater than 500:1
Minimum Ambient Operating Temperature	VA9104 and M9104 Series Non-Spring Actuators	-4°F (-20°C)
	M9106 and M9109 Series Non-Spring Return Actuators	
	VA2202 and M2202 Series Spring Return Actuators	-22°F (-30°C)
	M9206 Series Spring Return Actuators	-25°F (-32°C)
	M9210 Series Spring Return Actuators	-40°F (-40°C)
Maximum Ambient Operating Temperature[3] **(Limited by the Actuator and Linkage)**	Direct Mount	VA9104 Series Non-Spring Return Actuators: 140°F (60°C) VA2202 Series Spring Return Actuators: 122°F (50°C)
	M9000-550 Linkage	M9104 Series Non-Spring Return Actuators: 140°F (60°C)
	M2000-500 Linkage	M2202 Series Spring Return Actuators: 122°F (50°C)
	M9000-520 Linkage	M9106 and M9109 Series Non-Spring Return Actuators: 125°F (52°C) M9206 Series Spring Return Actuators: 140°F (60°C)
	M9000-51x Series Linkage	For Fluid Temperature Below 212°F (100°C) M9106 Series Non-Spring Return Actuators: 125°F (52°C) M9100 Series Non-Spring Return Actuators: 122°F (50°C) M9206 Series Spring Return Actuators: 140°F (60°C) M9210 Series Spring Return Actuators: 131°F (55°C)
		For Fluid Temperature between 212 and 284°F (100 and 140°C) All Actuators: 100°F (38°C)

VG1000 Series Forged Brass Ball Valves (Part 2 of 2)

Valve Body Size/Cv (kv)		See Table 2.
Leakage		0.01% of Max Flow per ANSI/FCI 70-2, Class 4 (Two- and Three-Way Control Port)
		1% of Max Flow for Three-Way Bypass Port
End Connections		National Pipe Thread (NPT)
Materials	Body	Forged Brass
	Ball	**VG1241 and VG1841 Series:**Chrome Plated Brass **VG1x45 and VG1243 Series:** 300 Series Stainless Steel
	Blowout-Proof Stem	**VG1241 and VG1841 Series:**Nickel Plated Brass **VG1x45 and VG1243 Series:** 300 Series Stainless Steel
	Seats	Graphite-Reinforced PTFE with EPDM O-Ring Backing
	Stem Seals	EPDM Double O-Rings
	Characterizing Disk	Amodel AS-1145HS Polyphthalamide Resin

1. Refer to VDI 2035 Standard for recommended proper water treatment.
2. Rangeability is defined as the ratio of maximum controllable flow to minimum controllable flow.
3. In steam applications, install the valve with the stem horizontal to the piping, and wrap the valve and piping with insulation.

The performance specifications are nominal and conform to acceptable industry standards. For application at conditions beyond these specifications, consult the local Johnson Controls office. Johnson Controls, Inc. shall not be liable for damages resulting from misapplication or misuse of its products.

JOHNSON CONTROLS

Controls Group
507 E. Michigan Street
Milwaukee, WI 53202

Metasys® is a registered trademark of Johnson Controls, Inc.
All other marks herein are the marks of their respective owners.
© 2007 Johnson Controls, Inc.

Published in U.S.A.

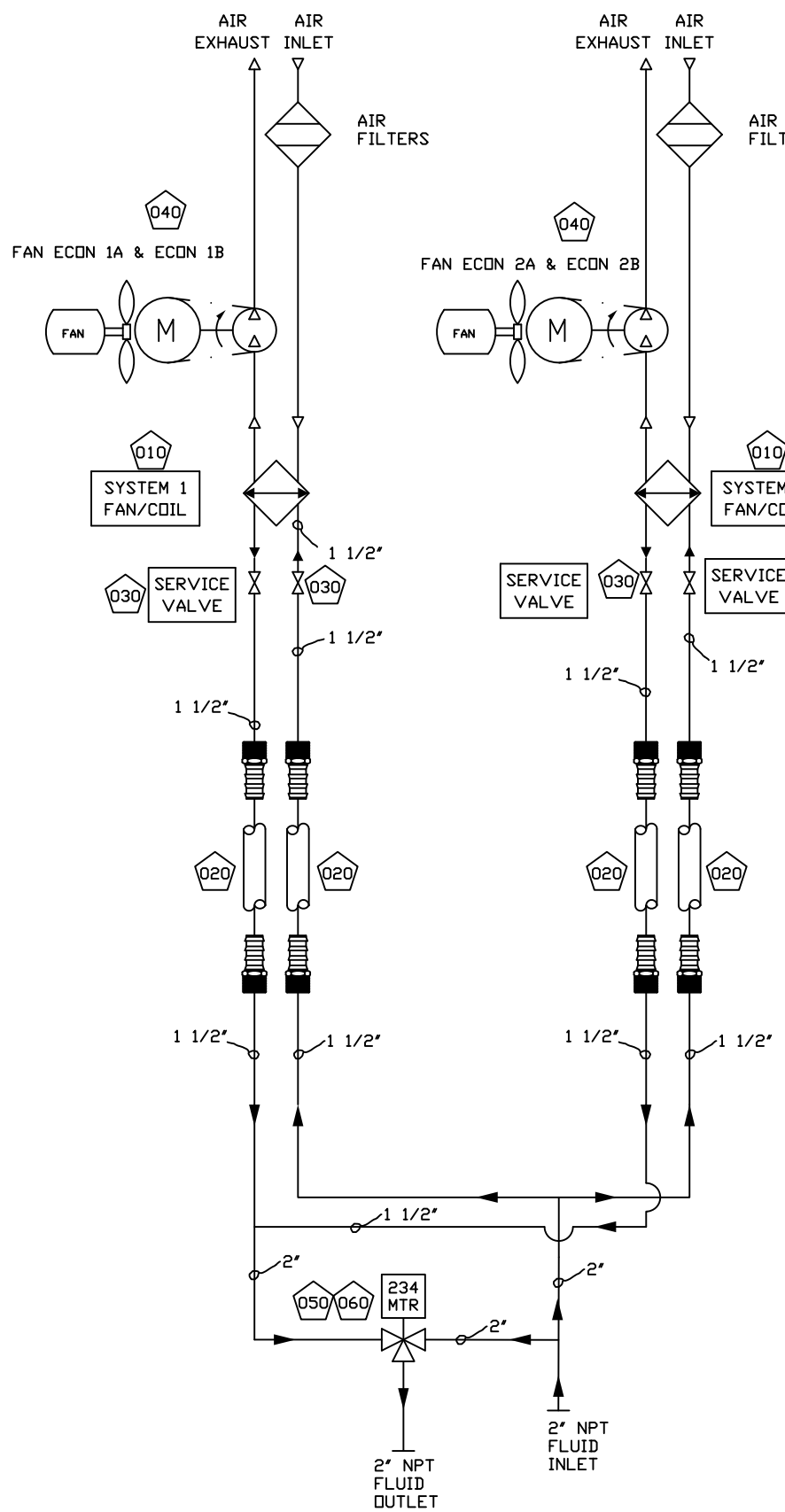

NOTE:

ALL INTERCONNECTING PLUMBING TO BE RUN IN FERROUS MATERIAL. OTHERWISE CONTACT ENGINEERING. BOM COMPONENTS EXCLUDED.

INSULATE TO ES-001 STANDARDS FOR LOW TEMP APPLICATION, PER 55 DEG F SETPOINT FOR (-L) UNITS.

NO.	ID/DESCRIPTION	K. K. PART#	QTY	TYPE
001	ECO20 -GE ECONOMIZER 460/3/60	0444469		ASSEM
010	COIL WATER TO AIR 60H X 53W	1413043	2. 0	PC
	MODEL: XXXXXXXXXXXX WATER/50% GLYC			
	OL TO AIR RATED FOR XX GPM XX,XXX B			
	TU/HR AT: AIR IN: XXF,FLUID OUT: XXF			
	IN: XX FLUID PRESSURE DROP X PSI S			
	URFACE 60 X 53, 1 1/2" CONNECTIONS			
	SEE DRAWING XXXXXX FOR CHANGES COIL			
	IS NOT SELF DRAINING AND WILL FREE			
	ZE IF WATER IS USED			
020	1 1/2 HOSE ASSY NON FERROUS	0607036	4. 0	ASSEM
* 001	HOSEBARB 1-1/2 MPT X 1-1/2 HOSE BRS	7512901	2. 0	PC
* 002	60200 HOSE CLAMP 1-1/4 - 2-1/8	7797411	2. 0	PC
	IDEAL SS			
* 003	HOSE 1-1/2 RED WINGFOOT 250 PSI	4410004	3. 0	PC
	569-025-381			
030	VALVE BALL BRONZE 1-1/2	4113150	4. 0	PC
	WATTS			
040	FAN ASSEMBLY 18"-5/8 1PH OUTDOOR	0611449	4. 0	ASSEM
	STEEL VENTURI FO			
	R GALVANIZED VENTURI USE 0608586			
* 010	048A170F1H MOTOR 1/2 HP 1PH,5/8 KEY	4051311	1. 0	PC
	ED SHAFT, SEALED ON SHAFT, 48 FRAM			
	E END, TEFC, 60 DEG C; 1625 RPM SAM			
	PLE MODEL #SW48A170F1A, CAT # T339A			
	; 60 HZ: 1/2 HP 1625 RPM 230/460/1,			
	2. 4A/1. 2A 50 HZ: 1/3 HP 1425 RPM 19			
	0-230/380/1 MARATHON (6/08 OLD # 04			
	8A170F1B CHANGE REV LEVEL)			
* 020	61142601 FAN BLADE 18 INCH 5/8 KEY	4500035	1. 0	PC
	ED HUB 28 DEG CW F08Y18-1828 5/8			
	ON DISCHARGE 3/16 KEY WAY LAU FO			
	R 1/2" HUB USE ADAPTER 4500052			
* 030	FAN GUARD MOUNT 18 DWG #101515	4507018	1. 0	PC
	1. 5 INCH TALL RENFRO FRANKLIN			
* 040	FAN GUARD FULL 18 DWG #101516	4507019	1. 0	PC
	4. 5 INCH TALL RENFRO FRANKLIN			
* 050	VENTURI 18 STEEL DWG #201679	4504181	1. 0	PC
	18 GA MEMPHIS METAL			
* 060	CAP 5/8 DIA X 1-1/2 VINYL	4021315	1. 0	PC
	(100 PER PKG)			
* 070	VIBRA-TITE 1 OZ. BOTTLES	9803000	0. 1	PC
*	**ACCT 4620. 00. 000**			
080	SILICONE SEALANT CLEAR	4508976	0. 1	PC
* 090	C5-A 51007 ANTI-SEIZE	4021324	0. 1	PC
	COPPER BASED, IN 1 LB CANS FEL-PRO			
* 100	BL50 LOCKNUT 1/2 TIGER GRIP STEEL	3800600	2. 0	PC
	APPLETON			
* 110	CG-5050S CORD STRAIN RELIEF	3800471	2. 0	PC
	0. 500-0. 625 CABLE 1/2 ST HUB APPL			
	ETON			
* 120	WIRE 14/3 SOW/SOOW 600V BLACK	3807095	5. 0	PC
	1000' REEL			
050	M-9000-340 WEATHER SHEILD	3647103	1. 0	PC
060	VG1841FT VALVE + 92JGGA 2" 3-WAY	3647065	1. 0	PC
	2. 0" NPT THREE WAY BALL VALVE INPU			
	TS: 24VAC, 0-10VDC CONTROL PORT CV			
	73. 7 PLATED BRASS TRIM BALL SPRING			
	RETURN, COUNTERCLOCKWISE, PORT A (C			
	OIL) OPEN JOHNSON CONTROLS			

ALL DIMENSIONS ARE IN INCHES

THIS PRINT CONTAINS INFORMATION PROPRIETARY TO DIMPLEX THERMAL SOLUTIONS. MAY NOT BE DUPLICATED, REPRODUCED, OR SHARED IN ANY WAY WITHOUT THE EXPRESSED WRITTEN CONSENT OF DIMPLEX THERMAL SOLUTIONS.

CONFIDENTIAL AND PROPRIETARY

DATE	DESCRIPTION OF REVISION	APPROVED BY

KOOLANT KOOLERS

Dimplex Thermal Solutions

SCHREIBER CHILLERS

DESIGN BY: BKS | DRAWN BY: BKS | KALAMAZOO, MI. PH (800) 968-5665 WWW.DIMPLEXTHERMAL.COM

DATE: 03-30-10 | PAGE 1 OF 1

ECO20

MECHANICAL

DRAWING NO. 444469

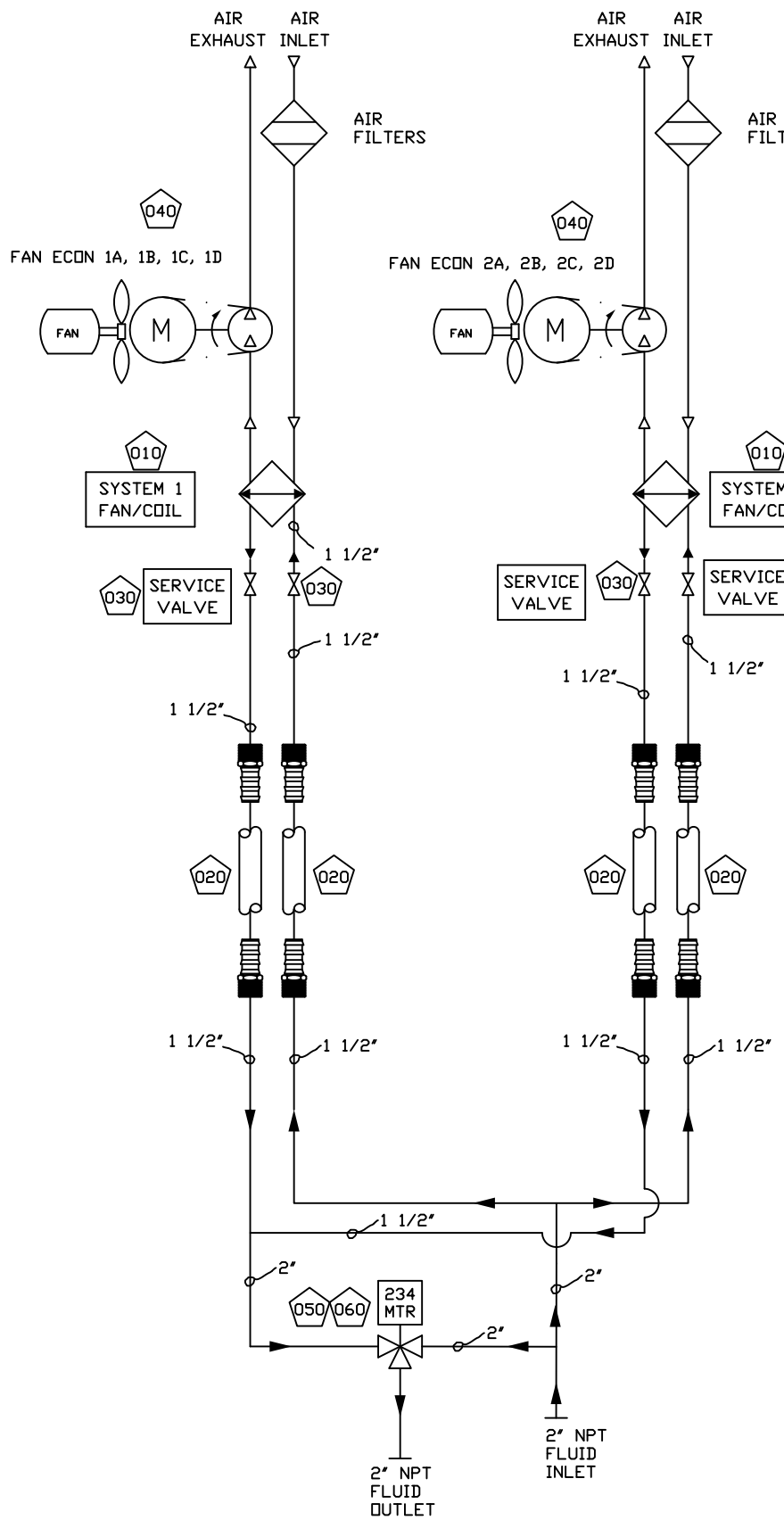

NOTE:

ALL INTERCONNECTING PLUMBING TO BE RUN IN FERROUS MATERIAL. OTHERWISE CONTACT ENGINEERING. BOM COMPONENTS EXCLUDED.

INSULATE TO ES-001 STANDARDS FOR LOW TEMP APPLICATION, PER 55 DEG F SETPOINT FOR (-L) UNITS.

	NO.	ID/DESCRIPTION	K. K. PART#	QTY	TYPE
	001	ECO30 -GE ECONOMIZER 460/3/60	0444470		ASSEM
	010	COIL WATER TO AIR 60H X 53W	1413043	2.0	PC
		MODEL: XXXXXXXXXXXX WATER/50% GLYC			
		OL TO AIR RATED FOR XX GPM XX,XXX B			
		TU/HR AT: AIR IN: XXF,FLUID OUT: XXF			
		IN: XX FLUID PRESSURE DROP X PSI S			
		URFACE 60 X 53, 1 1/2" CONNECTIONS			
		SEE DRAWING XXXXXX FOR CHANGES COIL			
		IS NOT SELF DRAINING AND WILL FREE			
		ZE IF WATER IS USED			
	020	1 1/2 HOSE ASSY NON FERROUS	0607036	4.0	ASSEM
*	001	HOSEBARB 1-1/2 MPT X 1-1/2 HOSE BRS	7512901	2.0	PC
*	002	60200 HOSE CLAMP 1-1/4 - 2-1/8	7797411	2.0	PC
		IDEAL SS			
*	003	HOSE 1-1/2 RED WINGFOOT 250 PSI	4410004	3.0	PC
		569-025-381			
	030	VALVE BALL BRONZE 1-1/2	4113150	4.0	PC
		WATTS			
	040	FAN ASSEMBLY 18"-5/8 1PH OUTDOOR	0611449	8.0	ASSEM
		STEEL VENTURI FO			
		R GALVANIZED VENTURI USE 0608586			
*	010	048A170F1H MOTOR 1/2 HP 1PH,5/8 KEY	4051311	1.0	PC
		ED SHAFT, SEALED ON SHAFT, 48 FRAM			
		E END, TEFC, 60 DEG C; 1625 RPM SAM			
		PLE MODEL #SW48A170F1A, CAT # T339A			
		; 60 HZ: 1/2 HP 1625 RPM 230/460/1,			
		2.4A/1.2A 50 HZ: 1/3 HP 1425 RPM 19			
		0-230/380/1 MARATHON (6/08 OLD # 04			
		8A170F1B CHANGE REV LEVEL)			
*	020	61142601 FAN BLADE 18 INCH 5/8 KEY	4500035	1.0	PC
		ED HUB 28 DEG CW F08Y18-1828 5/8			
		ON DISCHARGE 3/16 KEY WAY LAU FO			
		R 1/2" HUB USE ADAPTER 4500052			
*	030	FAN GUARD MOUNT 18 DWG #101515	4507018	1.0	PC
		1.5 INCH TALL RENFRO FRANKLIN			
*	040	FAN GUARD FULL 18 DWG #101516	4507019	1.0	PC
		4.5 INCH TALL RENFRO FRANKLIN			
*	050	VENTURI 18 STEEL DWG #201679	4504181	1.0	PC
		18 GA MEMPHIS METAL			
*	060	CAP 5/8 DIA X 1-1/2 VINYL	4021315	1.0	PC
		(100 PER PKG)			
*	070	VIBRA-TITE 1 OZ. BOTTLES	9803000	0.1	PC
*		**ACCT 4620.00.000**			
	080	SILICONE SEALANT CLEAR	4508976	0.1	PC
*	090	C5-A 51007 ANTI-SEIZE	4021324	0.1	PC
		COPPER BASED, IN 1 LB CANS FEL-PRO			
*	100	BL50 LOCKNUT 1/2 TIGER GRIP STEEL	3800600	2.0	PC
		APPLETON			
*	110	CG-5050S CORD STRAIN RELIEF	3800471	2.0	PC
		0.500-0.625 CABLE 1/2 ST HUB APPL			
		ETON			
*	120	WIRE 14/3 SOW/SOOW 600V BLACK	3807095	5.0	PC
		1000' REEL			
	050	M-9000-340 WEATHER SHEILD	3647103	1.0	PC
	060	VG1841FT VALVE + 92JGGA 2" 3-WAY	3647065	1.0	PC
		2.0" NPT THREE WAY BALL VALVE INPU			
		TS: 24VAC, 0-10VDC CONTROL PORT CV			
		73.7 PLATED BRASS TRIM BALL SPRING			
		RETURN, COUNTERCLOCKWISE, PORT A (C			
		OIL) OPEN JOHNSON CONTROLS			

ALL DIMENSIONS ARE IN INCHES

THIS PRINT CONTAINS INFORMATION PROPRIETARY TO DIMPLEX THERMAL SOLUTIONS. MAY NOT BE DUPLICATED, REPRODUCED, OR SHARED IN ANY WAY WITHOUT THE EXPRESSED WRITTEN CONSENT OF DIMPLEX THERMAL SOLUTIONS.

CONFIDENTIAL AND PROPRIETARY

DATE	DESCRIPTION OF REVISION	APPROVED BY

KOOLANT KOOLERS

Dimplex Thermal Solutions

SCHREIBER CHILLERS

DESIGN BY: BKS	DRAWN BY: BKS	KALAMAZOO, MI. PH (800) 968-5665 WWW.DIMPLEXTHERMAL.COM
DATE: 03-31-10	PAGE 1 OF 1	

ECO30

MECHANICAL

DRAWING NO. 444470

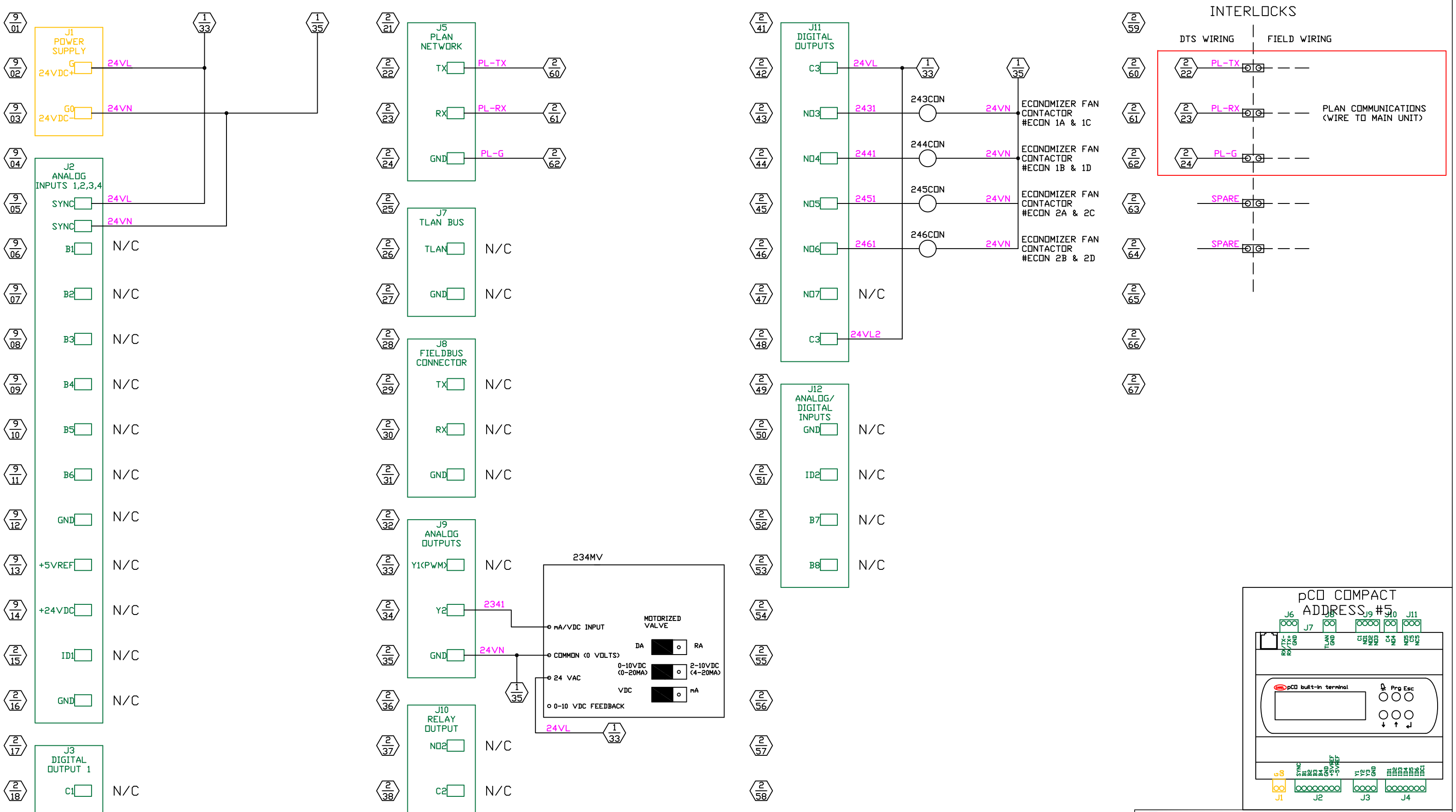

ALL DIMENSIONS ARE IN INCHES

THIS PRINT CONTAINS INFORMATION PROPRIETARY TO DIMPLEX THERMAL SOLUTIONS. MAY NOT BE DUPLICATED, REPRODUCED, OR SHARED IN ANY WAY WITHOUT THE EXPRESSED WRITTEN CONSENT OF DIMPLEX THERMAL SOLUTIONSS.

CONFIDENTIAL AND PROPRIETARY

DATE	DESCRIPTION OF REVISION	APPROVED BY

KOOLANT KOOLERS

Dimplex Thermal Solutions

SCHREIBER CHILLERS

DESIGN BY: MAR | DRAWN BY: MAR | KALAMAZOO, MI. PH (800) 968-5665 WWW.DIMPLEXTHERMAL.COM

DATE: 03/30/10 | PAGE 2 OF 3

ECON 20(30)-GE

ELECTRICAL

DRAWING NO. 444482

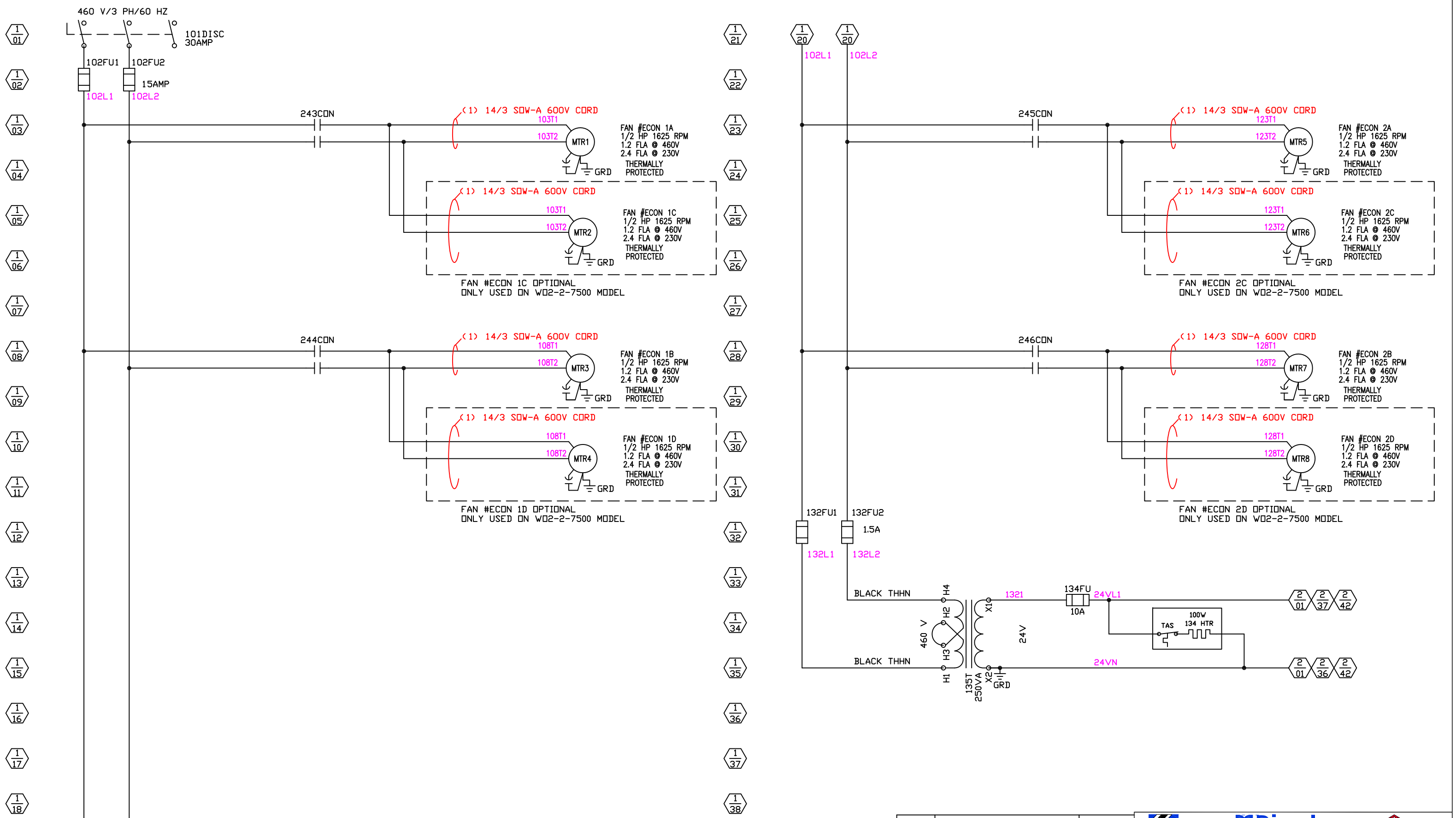

ALL DIMENSIONS ARE IN INCHES

THIS PRINT CONTAINS INFORMATION PROPRIETARY TO KOOLANT KOOLERS. MAY NOT BE DUPLICATED, REPRODUCED, OR SHARED IN ANY WAY WITHOUT THE EXPRESSED WRITTEN CONSENT OF KOOLANT KOOLERS.

CONFIDENTIAL AND PROPRIETARY

DATE	DESCRIPTION OF REVISION	APPROVED BY

KOOLANT KOOLERS

Dimplex Thermal Solutions

SCHREIBER CHILLERS

DESIGN BY: MAR	DRAWN BY: MAR	KALAMAZOO, MI. PH (800) 968-5665 WWW.DIMPLEXTHERMAL.COM
DATE: 02/10/10	PAGE 1 OF 3	

ECON 20(30)-GE

ECONOMIZER POWER

DRAWING NO. 444480

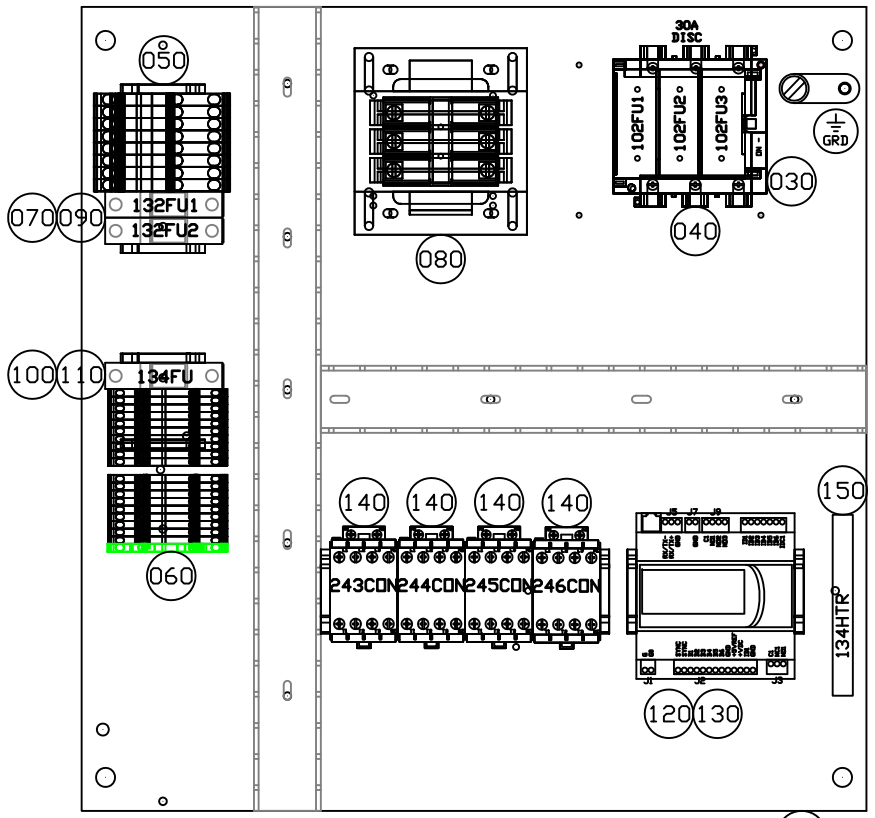

ELECTRICAL PANEL 020

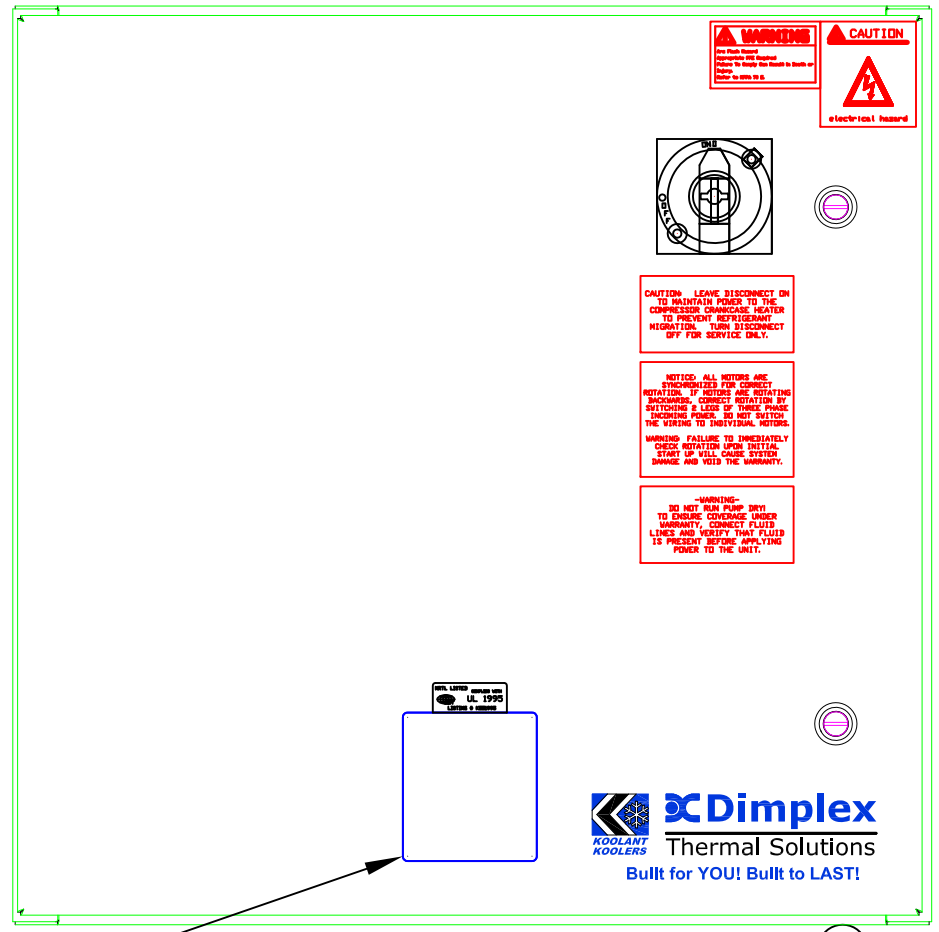

ELECTRICAL BOX 010

REPLACE ONLY WITH TIME DELAY FUSES

102FU1-3	15A	600V
132FU1-3	1.5A	600V
134FU	10A	250V

*NOTE: MOUNT ON REAR SIDE OF ENCLOSURE DOOR

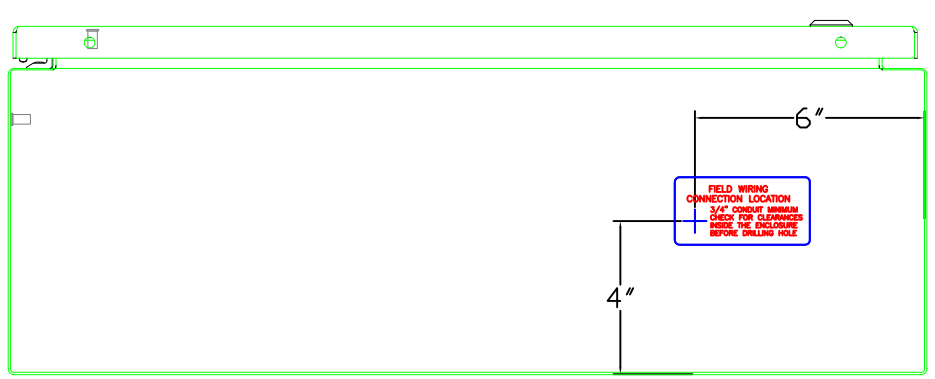

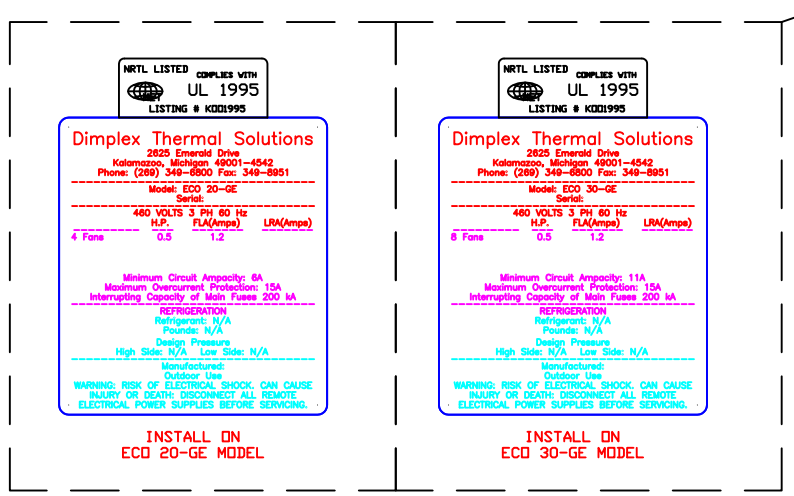

INSTALL ON
ECO 20-GE MODEL

INSTALL ON
ECO 30-GE MODEL

NO.	ID/DESCRIPTION	K. K. PART#	QTY	TYPE
001	ECO 20(30)-GE ELECT BOM	0444483		ASSEM
010	BOX NEMA 4/12 24 X 24 X 8	3444012	1.0	PC
	SAGINAW CONTROLS			
020	24 X 24 E-BOX PANEL PRE-PUNCHED	0427469	1.0	ASSEM
* 001	SHEET 12 GA GALV. 48 X 120	9531200	18.0	PC
	CHEMTREAT G-90 DRY 181.2 LBS/SHEET			
030	194R-NJ030P34ER1 DISCONNECT 30A	3110003	1.0	PC
	1 AMP TO 30 AMP AJT FUSES W/SHAFT			
	FOR UP TO 10" DEEP BOX FOR DEEPER			
	BOX USE 3114004 ALLEN BRADLEY			
040	AJT15 OR LPJ15 FUSE	3500909	2.0	PC
	GOULD OR BUSSMANN			
050	8 IEC TERMINAL BLOCKS A-B 1492-L6T	0606544	1.0	ASSEM
	AWG 22-8 600V AC/DC 50A 38PCS/FT			
* 001	1492-L6T TERMINAL BLOCK (50 AMP)	3123003	8.0	PC
	ALLEN BRADLEY			
* 002	1492-EBL6T END BARRIER (50 AMP)	3123085	1.0	PC
	ALLEN BRADLEY			
* 003	1492-ERL35 END ANCHOR(20/50 AMP)	3123087	1.0	PC
	ALLEN BRADLEY			
* 004	1492-LG3Q GROUNDING BLOCK (20 AMP)	3123017	1.0	PC
	ALLEN BRADLEY			
* 005	1492-CJK510 JUMPER (20 AMP)	3123095	0.3	PC
	ALLEN BRADLEY			
060	20 IEC TERMINAL BLOCKS A-B 1492-LQ3	0606534	1.0	ASSEM
	AWG 22-12 600V AC/DC 20A 50PCS/FT			
* 010	1492-L3Q TERMINAL BLOCK (20 AMP)	3123021	20.0	PC
	ALLEN BRADLEY			
* 020	1492-EBL3Q END BARRIER (20 AMP)	3123086	1.0	PC
	ALLEN BRADLEY			
* 030	1492-ERL35 END ANCHOR(20/50 AMP)	3123087	1.0	PC
	ALLEN BRADLEY			
* 040	1492-LG3Q GROUNDING BLOCK (20 AMP)	3123017	1.0	PC
	ALLEN BRADLEY			
* 050	1492-CJK510 JUMPER (20 AMP)	3123095	0.3	PC
	ALLEN BRADLEY			
* 060	199-DR1 MOUNTING RAIL	3127100	1.0	PC
	5PC/BOX 1 METER LONG ALLEN BRADLEY			
070	CHCC1D FUSE HOLDER 30A, CC CLASS	3511203	2.0	PC
080	1497-E-BAJK-O-N TRANSFORMER 250VA	3160016	1.0	PC
	ALLEN BRADLEY			
090	ATDR1-1/2 OR FNQR 1-1/2 FUSE	3500972	2.0	PC
	GOULD OR BUSSMANN			
100	TRM10 OR FNM10 FUSE	3500091	1.0	PC
	GOULD OR BUSSMANN			
110	CHM1D FUSED TERMINAL BLOCK BUSSMAN	3510900	1.0	PC
120	PCDX000BAO COMPACT BOARD, CAREL	4807776	1.0	PC
	WITH PGD1, 1DI7DO,8AI,1AO,1PWM (3/			
	10 - OLD # SNS0000ELO)			
130	SNSCDNOLO pCDxs Screw Terminals	4807777	1.0	PC
	FOR 7 RELAY BOARD			
140	100-C09KJ10 CONTACTOR 24 VAC COIL	3100400	4.0	PC
	COIL RATED FOR BOTH 50 AND 60 HZ			
	ALLEN BRADLEY			
150	HEATER 100 WATT ENCLOSURE 24VAC	3835107	1.0	PC
	SILICON RUBBER 4"WIDE X 5' LONG			
	WITH THERMOSTAT ON AT 40°F OFF 55°F			
	WITH 3 FOOT LEAD WIRES UL			
	RECOGNIZED, SLB-4-5-55P-36C-24V-100			
	W OGDEN			

* PARTS NOT SHOWN ON DRAWING DETAIL

ALL DIMENSIONS ARE IN INCHES

THIS PRINT CONTAINS INFORMATION PROPRIETARY TO DIMPLEX THERMAL SOLUTIONS. MAY NOT BE DUPLICATED, REPRODUCED, OR SHARED IN ANY WAY WITHOUT THE EXPRESSED WRITTEN CONSENT OF DIMPLEX THERMAL SOLUTIONSS.

CONFIDENTIAL AND PROPRIETARY

DATE	DESCRIPTION OF REVISION	APPROVED BY

KOOLANT KOOLERS

Dimplex Thermal Solutions

SCHREIBER CHILLERS

DESIGN BY: MAR | DRAWN BY: MAR | KALAMAZOO, MI. PH (800) 968-5665 WWW.DIMPLEXTHERMAL.COM

DATE: 03/30/10 | PAGE 3 OF 3

ECO 20(30)-GE

ELECTRICAL

DRAWING NO. 444483